Minutes
of
69th PCC Meeting

Date: 31.07.18
Eastern Regional Power Committee
14, Golf Club Road, Tollygunge
Kolkata: 700 033

EASTERN REGIONAL POWER COMMITTEE

MINUTES OF 69TH PROTECTION SUB-COMMITTEE MEETING HELD AT ERPC, KOLKATA ON 19.07.2018 (THURSDAY) AT 10:30 HOURS

List of participants is enclosed at **Annexure-A.**

Member Secretary, ERPC chaired the meeting. He welcomed all the participants to the meeting. He informed that third party protection audit was planned for different substations of West Bengal & Odisha in the months of July & August 2018. He requested members to finalize the schedule of the audit. He also informed that a presentation was arranged by CESC on "on-line station battery E/F monitoring system" which would be presented by M/s Bender India Limited. He thanked CESC & M/s Bender India for arranging the presentation.

PART – A

ITEM NO. A.1: Confirmation of minutes of 68th Protection sub-Committee Meeting held on 18th June, 2018 at ERPC, Kolkata.

The minutes of 68th Protection Sub-Committee meeting held on 18.06.18 circulated vide letter dated 05.07.18.

Members may confirm the minutes of 68th PCC meeting.

Deliberation in the meeting

Members confirmed the minutes of 68th PCC minutes.

PART – B

ANALYSIS & DISCUSSION ON GRID INCIDENCES OCCURRED IN JUNE, 2018

ITEM NO. B.1: Disturbance at 400kV Bakreswar S/s on 19.06.2018 at 10:10 hrs.

At the time of connecting the Bakreswar unit#2 to transfer bus via bus coupler CB during taking shutdown of main CB connected to GT of the said unit, all elements connected to bus I tripped on LBB operation. It is suspected that NIT (Normal Intermediate Switch) remained in the intermediate position in the case of bus coupler CB between 400 kV main and transfer bus, which led to LBB initiation.

Generation Loss: 210 MW

No fault has been observed in PMU data during that instant.

WBPDCL may explain.

Deliberation in the meeting

The agenda item could not be discussed as WBPDCL representative was not present in the meeting.

ITEM NO. B.2: Tripping of 400kV HEL-Subhasgram D/C on 10.06.2018 at 21:52 hrs.

At 21:52 hrs 400 kV HEL Subhasgram D/C tripped on B-N fault resulting tripping of both units at HEL due to loss of evacuation path.

Relay indications are as follows:

Name of the elements	Relay Indication at end 1	Relay Indication at end 2
400 kV HEL – Subhasgram - I	B-N, Z-II, A/R unsuccessful, 2 kA	B-N, Z-I, 10 kA, A/R unsuccessful
400 kV HEL – Subhasgram - II	B-N, Z-II, A/R unsuccessful, 2.6 kA 67.71 km distance	B-N, Z-I, 8.6 kA, All three phases breaker opened in same time without A/R opened

Generation Loss: 550 MW

Discrepancies Observed during the event:

1. Reason for tripping of all three phase breakers at Subhasgram end of 400 kV Subhasgram – HEL D/C may be explained
2. As per DR at Subhasgram end of 400 kV Subhasgram – HEL Ckt-II all tie breakers were in opened condition prior to the disturbance.

Powergrid and CESC may explain.

Deliberation in the meeting

CESC and Powergrid explained the disturbance separately with a presentation. Presentation is enclosed at Annexure-B2.

Powergrid explained that the weather was stormy with frequent lightning. There were two consecutive faults appeared in 400 kV HEL – Subhasgram D/C line during the disturbance.

At 21:49 hrs, there was a R-N fault in 400kV Subhasgram-HEL Circuit-2. Autoreclosure was successful at both ends and the main breaker of circuit-2 at Subhasgram end was reclosed successfully. But the tie breaker at Subhasgram end did not close due to faulty coil in closing command circuit. The line remained in charged condition only through Main breaker at Subhasgram.

At 21:52 hrs, B-N fault was occurred in both the circuits of 400kV Subhasgram-HEL D/C line. HEL informed that autoreclosure was attempted at HEL end in both the circuits but did not successful due to persistent fault.

Powergrid informed that 3-phase trip has been initiated for 400kV Subhasgram-HEL circuit-2 from Subashgram end without autorecloser attempt. This was due to wrong configuration of main-II relay at Subhasgram end, the relay has initiated 3-phase trip even for single phase fault when the tie brakers are in open condition.

Powergrid further informed that they have rectified the settings of Main 2 relay at Subashgram after the instant and also replaced the faulty coil in closing command circuit of tie breakers of 400kV HEL-Subhasgram circuit-2 at Subashgram s/s .

ITEM NO. B.3: Repeated Grid Disturbances at Madhepura S/s.

1. Grid disturbance on 05.06.2018 at 10:20 hrs and 16:32 hrs.

At 10:20 hrs, 220 kV New Purnea – Madhepura D/C tripped on R-N fault causing load loss at Madhepura Supaul and Lahan (Nepal). 220 kV Purnea Madhepura – II was charged at 10:57 hrs and Circuit I was declared under breakdown.

Later at 16:32 hrs, 220 kV Purnea Madhepura II tripped again in O/C resulting total power failure at nearby area.
Relay indications:

Time	Name of the elements	End 1 Relay Indication	End 2 Relay Indication
10:20 Hrs	220 kV New Purnea - Madhepura - I	B-N	B-N
10:20 Hrs	220 kV New Purnea - Madhepura - II	B-N	B-N
16:32 Hrs	220 kV New Purnea - Madhepura - II	O/C	O/C

As per PMU data, fault clearance time is 300 ms for the event at 10:20 hrs. In case of second event at 16:32 hrs fault clearing time is less than 100 ms.

Load Loss: 133 MW(1st incidence at 10:20 hrs)
160 MW(2nd incident at 16:32 hrs)

Deliberation in the meeting

Powergrid and BSPTCL explained that there was a B-N fault in 220kV New Purnea-Madhepura line-II at 10:19 hrs which was cleared from New Purnea end on zone-II and from Madhepura end on zone-I.

Thereafter, a B-N fault appeared in 220kV New Purnea-Madhepura line-I at 10:20 hrs due to jumper snapping. Both the ends cleared the fault in zone-I.

Regarding the tripping at 16:32 hrs, Powergrid informed that 220kV Madhepura-New Purnea circuit-I was under outage since 10:20 Hrs. There was a B-N fault in 220kV Madhepura-New Purnea circuit-II and New Purnea end tripped on zone 2 within 200 ms.

On enquiry, Powergrid informed that zone 2 time setting of 220kV Madhepura-New Purnea circuit-II at New Purnea end was set at 200 ms.

PCC observed that the fault should be cleared within 100 ms through inter tripping scheme.

PCC advised Powergrid and BSPTCL to take the following corrective actions:

- *Distance relay Zone 2 settings at New Purnea end should be set or incorporated as per the ERPC Protection philosophy*
- *Healthiness of PLCC and inter tripping scheme at both the ends should be examined and report.*

2. Grid disturbance on 26.06.2018 at 04:39 hrs.

At 04:39 hrs, 220 kV New Purnea – Madhepura D/C tripped on R-N fault causing load loss at Madhepura Supaul and Lahan (Nepal).

Load loss: 150 MW

BSPTCL and Powergrid may explain.

Deliberation in the meeting

BSPTCL informed that there was a R-N fault in both circuits of 220kV Madhepura-Laukhi D/C line which was idled charged from 220kV Madhepura end. Madhepura end relay picked up the fault in zone 3 and the line got tripped within 1 sec. In the mean time, backup O/C, E/F protection of 220 KV Madhepura- Purnea(PG) D/C line at New Purnea end operated within 990 ms.

The relay indications as informed by BSPTCL and Powergrid are given below:

Name of the Line	***End 1 Relay indication***	***End 2 Relay indication***
220 KV Madhepura-Laukhi Circuit-1	*R-N ,Zone-3, 3ph Trip,*	*Circuit idle charged from*

	113.5 KM, 1 sec	*Madhepura end, open from Laukhi end.*
220 KV Madhepura-Laukhi Circuit-2	*R-N , Zone-3, 3ph Trip, 113.5 KM, 1 sec*	*Circuit idle charged from Madhepura end, open from Laukhi end.*
220 KV Madhepura- Purnea(PG) Circuit-1	*R, N Pickup (-93.3 KM)*	*Backup E/F , R-N, 990 ms*
220 KV Madhepura- Purnea(PG) Circuit-2	*R, N Pickup (-92.8 KM)*	*Backup E/F, R-N, 990 ms*

PCC opined that 220kV Madhepura-New Purnea D/C line should not trip for a fault in 220kV Madhepura-Laukhi lines. Madhepura end relay of 220 KV Madhepura-Laukhi D/C lines should pick up the fault at least in zone 2, instead of zone 3.

BSPTCL informed that they are not having the line parameters of 220 KV Madhepura-Laukhi D/C lines hence they could not set proper reach settings of distance protection.

PCC advised BSPTCL to take the following corrective actions:

- *Since 220 KV Madhepura-Laukhi D/C lines were idle charged from Madhepura end, the timing of all forward zone settings including directional O/C & E/F settings should be revised to "Instantaneous" immediately.*
- *The line parameters of 220 KV Madhepura-Laukhi D/C lines should be measured. The zone reach settings should be revised as per the actual line parameters.*
- *At the time of charging 220 KV Madhepura-Laukhi D/C lines from both ends, the timing of all forward zone settings including directional O/C & E/F settings should be revised as per ERPC protection philosophy to avoid mismatch regarding coordination with adjacent line protection relays.*

ITEM NO. B.4: Total power failure at 220/132 kV Sipara S/s (BSPTCL) on 15.06.2018 at 10:58 hrs.

At 10:58 hrs, due to bus bar relay operation at Sipara S/s the following elements tripped.

i. 220 kV Patna – Sipara T/C
ii. 220 kV Sipara – Khagul S/C
iii. 220 kV Sipara- Fatuah S/C
iv. 220/132 kV ICT – I, II & III at Sipara

Relay Indication:

Name of the elements	Relay Indication at End 1	Relay Indication at End 2
220 kV Sipara –Khagul - I	21(D/P), B-N, F/C 7.34 kA, 11.2 km from Sipara	B-N, 12.85 km from Khagul, Z-I

Analysis of PMU plot:

As per PMU data, multiple faults have been seen in B phase around 10:58 hrs which got cleared within 100 ms.

BSPTCL and Powergrid may explain.

Deliberation in the meeting

BSPTCL informed that the fault (B-N) was in 220kV Sipara-Khagul line and the fault got cleared from both the ends on zone 1, B-N within 100 msec. But, all the elements connected to both the buses at 220kV Sipara got tripped due to mal-operation of Busbar relay at 220kV Sipara.

BSPTCL added that the existing bus bar protection system (M/s Esun Reyroll) installed at 220kV Sipara s/s is very old and the performance is found to be not satisfactory. They are not getting OEM support for rectification.

BSPTCL further informed that they have kept the busbar protection out of the service after this incident and planning to replace the busbar protection scheme with a new one.

PCC advised BSPTCL to check & analyse the disturbance recorders of all the feeders along with the timing of relay operation and Circuit breaker opening time in order to ascertain the cause of busbar relay operation.

ITEM NO. B.5: Repeated interruption of power supply

A. At Lalmatia and Sahebgunj area

Repeated interruption of power supply occurred at Lalmatia and Sahebgunj area in the month of June 2018. Summary of the events are given in the following table. JUSNL may share their remedial actions regarding frequent interruption of power supply to these areas due to N-1 Non-Compliance during Grid Operation which is a violation of clause 3.1.e of CEA Grid standard and clause 6.2.1 of CEA planning Criteria 6.2.1.

Date	Event Time	Event Summary	Load loss	generation loss	Restoration time
07-06-18	13:32Hrs	Tripping of 132 kV Kahalgaon (BSPTCL) - Lalmatia S/C resulted load loss at Sahebgunj	30 MW	0 MW	13:52 Hrs
07-06-18	12:15hrs	220 kV Farakka – Lalmatia S/C tripped from Farakka end on B-N fault at 11:35 hrs. At 12:15 hrs 132 kV KhSTPP – Lalmatia (on E/F) and 132 kV Kahalgaon (BSPTCL) – Lalmatia S/C tripped resulting total power failure at surrounding areas.	85 MW	0 MW	Sahebgunj and Lalmatia load restored at 12:58 and 13:07hrs respectively
21-06-18	15:50Hrs	132 kV Kahalgaon (BSPTCL) – Lalmatia S/C tripped on E/F resulting load loss at Sahebgunj which was radially connected through Kahalgaon – Lalmatia – Sahebgunj section.	36 MW	0 MW	16:40 Hrs
30-06-18	09:45Hrs	132 kV KhSTPP (NTPC) – Lalmatia S/C and 132 kV Kahalgaon (BSPTCL) – Lalmatia S/C tripped at 09:45 hrs on E/F.	35 MW	0 MW	10:20 Hrs

		Tripping of 132 kV Kahalgaon (BSPTCL) – Lalmatia S/C caused load loss of 35 MW at Sahebgunj as it is being fed directly from Kahalgaon (BSPTCL) through transfer bus at Lalmatia. Local load at Lalmatia was supplied from 220 kV Farakka – Lalmatia through main bus at Lalmatia.			

JUSNL may explain.

Deliberation in the meeting

JUSNL explained that most of the faults are in transient nature.

PCC advised JUSNL to comply the earlier observations/recommendations regarding frequent trippings incidences at Lalmatia S/s.

In view of repeated uncoordinated trippings and mal-operation of relays at 220/132kV Lalmatia S/s in the past, PCC decided to form a Committee with members from NTPC, Powergrid, ERLDC and ERPC. The Committee would visit Lalmatia and adjoining substations for on-site inspection and Third Party Protection Audit.

B. At Banka, Sultanganj and Sabour

Repeated interruption of power supply occurred at Banka, Sultanganj and Sabour area in the month of June 2018. Summary of the events are given in the following table. BSPTCL may share their remedial actions regarding frequent interruption of power supply to these areas due to N-1 Non-Compliance during Grid Operation which is a violation of clause 3.1.e of CEA Grid standard and clause 6.2.1 of CEA planning Criteria 6.2.1.

Date	Event Time	Event Summary	Load loss	generation loss	Restoration time
01-06-18	22:07Hrs	Tripping of 132 kV Banka – Sultanganj D/C on E/F resulted loss of power supply to Sultanganj	34 MW	0 MW	22:23 Hrs
06-06-18	12:49hrs	Tripping of 132 kV Banka – Sultanganj D/C on R-Y fault resulted loss of power supply to Sultanganj	33 MW	0 MW	13:26 Hrs
14-06-18	06:28hrs	132 kV Banka Sabour – I tripped on Z-II end from Banka end and 132 kV Banka Sabour – II tripped on overcurrent protection from Sabour due to R phase CT bursting of 132 kV Sabour Sultanganj II at Sabour. Delayed fault clearance has been observed in PMU data. PMU observation is attached in annexure. ER-I may share the reason for non-tripping of 132 kV Banka Sultanganj II from Banka end.	71 MW	0 MW	07:00 Hrs

19-06-18	16:44Hrs	At 16:44 Hrs, 132 kv Banka-Banka I tripped on Y-B-N fault and circuit II tripped only from BSPTCL end resulting total power failure at Banka.	65 MW	0 MW	17:34 Hrs
20-06-18	05:55Hrs	At 05:55 Hrs, 132 kv Banka-Banka I tripped on Y-B fault and circuit II tripped only from BSPTCL end resulting total power failure at Banka.	15 MW	0 MW	07:05 Hrs
27-06-18	02:05Hrs	At 02:05 hrs, 132 kV Banka – Banka D/C tripped on Y-B-N fault. Relay indication at PG end for circuit I is Y-B, Z-III, 12.5 KM, 4.6 kA, Z-III. Circuit II did not trip at PG end. Circuit II was charged at 02:22 Hrs. Fault clearing time 1000 ms. While charging circuit I at 02:25 hrs it trippled again in Z-I from BSPTCL end. Fault clearing time <100 ms.	45 MW	0 MW	03:25 Hrs

BSPTCL may explain.

Deliberation in the meeting

Regarding trippings on 01.06.18, 06.06.18 and 14.06.18, BSPTCL informed that the faults were in 132kV Sultanganj-Sabour line which was idle charged from Sultanganj end. Due to defective relays at 132kV Sultanganj end for the said lines, the relays did not operate and fault was cleared from 132kV Banka end in all the instances.

BSPTCL further informed that transfer bus protection relays are being used for 132kV Sultanganj-Sabour line at Sultanganj from 15.06.18. No mal-operation was observed thereafter.

Regarding the disturbances on 19.06.18, 20.06.18 and 27.06.18, BSPTCL informed that the faults were in 132kV Banka- Katauria line, which is idle charged from Banka end. Due to CT star point reversal at Banka s/s end, the 132kV Banka- Katauria line faults were not properly picked up from 132kV Banka end.

BSPTCL added that they have rectified the star point connection of 132kV Banka- Katauria line at 132kV Banka on 30.06.18.

ITEM NO. B.6: Tripping Incidences in the month of June,2018.

Other tripping incidences occurred in the month of June 2018 which needs explanation from constituents of either of the end is circulated with the agenda.

In 58th PCC, ERLDC informed that most of the constituents are not submitting the DR and EL data for single line trippings.

PCC advised all the constituents to upload the details along with DR and EL in PDMS on-line portal and referred the issue to TCC for further guidance.

In 36th TCC, all the constituents were advised to use the PDMS on-line portal for uploading the single line tripping details along with DR (comtrade files), EL and other relevant files for all trippings of August 2017 onwards. Otherwise, it will be considered as violation of compliance of clause 5.2(r) & 5.9 of IEGC.

Members may discuss.

Deliberation in the meeting

Members explained the tripping incidences. Updated status is enclosed at ***Annexure-B6****.*

PCC advised all the concern constituents to take necessary corrective action to resolve the issues.

ITEM No. B.7: Presentation on station battery E/F monitoring System.

As per the discussion in previous PCC meetings, CESC was agreed to arrange a presentation on DC E/F monitoring system by their vendor in order to share & discuss the topic in PCC forum.

CESC vide mail dated 11.07.18 confirmed that M/s Bender India will provide a short presentation on the above topic during 69th PCC meeting.

M/S Bender may present.

Deliberation in the meeting

M/s Bender gave a detailed presentation on "On-line Station Battery Earth fault Monitoring System".

PCC appreciated the presentation and thanked M/s Bender for enriching the knowledge on Earth fault monitoring system. PCC also thanked CESC for arranging the presentation.

ITEM NO. B.8: Schedule for third party protection Audit.

The details of Substation and tentative dates for third party protection audit planned to be carried out during the months of July-18 & August-18 are given below:

STATE	Name of the Substations	Dates
West Bengal	132kV Joka 132 kV Falta 132kV Sonarpur	26th July 2018
	132kV Titagarh 132kV Dharampur	27th July 2018
	132kV Barasat 132kV Ashoknagar	31st July 2018
	132kV Ranaghat 132kV Kalyani	07th August 2018
	132kV Liluah 132kV Adisaptagram	08th August 2018
	132kV Kolaghat 132kV CK Road	09th August 2018
	132kV Haldia 132kV Hijili	10th August 2018
	132kV Malda 132kV Raigunj	13th & 14th August 2018 (Tentative)
	132kV NBU 132kV Moinaguri 132kV Birpara 132kV Alipurduar	03rd Sep, 2018 to 7th Sep.2018. (Tentative)

Odisha	132kV Balasore 132kV Bidanasi 132kV Paradeep 132kV Narendrapur 132kV New Bolangir 132kV Budhipadar 132kV Katapalli	Last week of August 2018.

Members may note.

Deliberation in the meeting

Members finalized the schedule as mentioned above.

PCC advised ERLDC, WBSETCL, OPTCL, BSPTCL and Powergrid to nominate a member for the Audit.

PART- C:: OTHER ITEMS

ITEM NO. C.1: Implementation of new islanding schemes in ER

1. Islanding scheme at IbTPS- OPGC

68th PCC opined that the draft scheme submitted by Odisha was three years old and the draft scheme is needed to be reviewed with existing network configuration.

PCC decided to discuss the islanding scheme in next PCC Meeting and advised OPTCL to submit all the relevant details to ERPC and ERLDC.

OPTCL and OPGC may update.

Deliberation in the meeting

OPTCL presented the revised islanding scheme based on updated network configuration and power flows. The details are enclosed at Annexure-C.1.1.

It was decided that ERLDC and ERPC will study and finalize the islanding scheme in next PCC Meeting.

FOLLOW-UP OF DECISIONS OF THE PREVIOUS PROTECTION SUB-COMMITTEE MEETING(S)

(The status on the follow up actions is to be furnished by respective constituents)

ITEM NO. C.2: Disturbance at Hatia at 18:22 hrs on 30-05-2018

Regarding tripping of 220kV Hatia-Patratu lines, JUSNL informed that from Patratu end there was no relay indication as well as no tripping.

As there was no overvoltage indication at Patratu end, PCC felt that such high voltage was unlikely possible in the given scenario of the fault. PCC opined that It should be a measurement error and advised JUSNL to check double grounding/earthing in CVT circuits as double grounding leads to high voltage during fault.

From one of the DR of Hatia-Patratu line it also came to known that one of the polarity of CVT was in reverse. It was concluded that this reverse connection was the cause of enabling VT fuse failure alarm in the relay.

PCC advised JUSNL to rectify the CVT polarity connection as well as to test the CVT in normal condition and submit a report on this tripping within seven days.

JUSNL may update.

Deliberation in the meeting

PCC advised JUSNL to comply the PCC observations at the earliest.

ITEM NO. C.3: Disturbance at 220kV Lalmatia S/s at 03:25 hrs on 14-05-2018

JUSNL informed that the fault was due to bursting of R-phase busing on 132 kV side of 132/33 kV transformer.

PCC opined the fault was not cleared from 132kV Lalmatia S/s as a result the lines which were connected to sources got tripped:

PCC advised JUSNL to check the protection system at 132kV Lalmtia S/s including 220/132kV ATRs.

JUSNL may update.

Deliberation in the meeting

The issue was covered in item B5 A.

ITEM NO. C.4: Issues related with Generation Backing down during Talcher-Kolar SPS operation on 16th May 2018.

NTPC explained that Talcher units were given the generation relief as per the SPS logic. Since Pole block with ground return mode is not configured in the SPS logic, sufficient generation reduction is being provided in this case.

PCC advised Powergrid to explore for inclusion of pole block with ground return mode signal in the SPS logic.

PCC advised NTPC, GMR and JITPL to ensure the generation reduction as per the SPS logic.

Powergrid informed that OEM is visiting the site in this month for detail investigation on frequent pole trippings.

Powergrid may update.

Deliberation in the meeting

Powergrid informed that Engineer from M/s Siemens ,Germany has visited HVDC, Talcher on 23.06.18 for investing the reason for frequent tripping of HVDC pole-1. During healthiness checks, OPTODYNE (DC side CT) which is feeding the protection system-1 of pole-1 was found defective. The faulty OPTODYNE was replaced and no moloperations were observed thereafter.

Regarding inclusion of pole block with ground return mode signal in the SPS logic, Powergrid informed that the issue was referred to OEM.

Powergrid added that the ground return mode can be derived at NTPC end from power flow signal which was already available to them.

PCC advised NTPC also to explore for inclusion of pole block with ground return mode signal in the SPS logic.

ITEM NO. C.5: Total power failure at 400/132 kV Motihari substation on 07-04-2018 at 09:56 hrs

In 67th PCC, it was decided to form a Committee with members from NTPC, Powergrid, ERLDC and ERPC. The Committee would visit 400kV Motihari S/s during 11th June 2018 to 13th June 2018 and will do on-site inspection along with Third Party Protection Audit and place the report in next PCC Meeting.

Accordingly, Third Party Protection Audit was done on 11th June 2018.

In 68th PCC, Detailed report was placed in the meeting which is enclosed at **Annexure-C5**.

PCC advised DMTCL to comply the observations at the earliest.

DMTCL may update.

Deliberation in the meeting

DMTCL informed that they have referred the observations to Siemens for necessary action and M/s Siemens would visit the stations in next week.

ITEM NO. C.6: Tripping of 132 kV KhSTPP - Lalmatia S/C and 132 kV Kahalgaon (BSPTCL) - Lalmatia S/C tripped from Lalmatia on 20-04-2018 at 10:35 hrs

At 10:35 hrs 132 kV KhSTPP - Lalmatia S/C and 132 kV Kahalgaon (BSPTCL) - Lalmatia S/C tripped from Lalmatia resulting load loss at Sahebgunj

In 67th PCC, JUSNL informed that there was a B-N fault in 132 kV Kahalgaon (BSPTCL) - Lalmatia S/C line and the fault was successfully cleared from both ends on over current protection. But 132 kV KhSTPP - Lalmatia S/C was also tripped from Lalmatia end on overcurrent protection.

NTPC informed no tripping signal was initiated from their end and the line was manually tripped from their end.

PCC opined that similar incidents were occurred in March 2018 and in 66th PCC JUSNL was advised to check the relay settings and resolve the issue.

PCC once again advised JUSNL to check the reasons for maloperation of the relay of 132 kV KhSTPP (NTPC) - Lalmatia S/C at Lalmatia end within 10 days and submit a report to ERPC and ERLDC.

In 69th PCC, JUSNL was once again advised to comply the observations & submit the report.

JUSNL may update.

Deliberation in the meeting

The issue was covered in item B5 A.

ITEM NO. C.7: Zone 3 settings of ISTS lines

Based on the data available in PDMS, the zone 3 settings of all ISTS lines in Eastern Region were verified and compared with the corresponding resistive reach of the line thermal loading. Zone 3 settings were also checked with the agreed protection philosophy of ER. The discrepancies observed in the settings will be presented in the meeting.

In 67th PCC, PRDC presented the list of ISTS lines where they observed the discrepancy in zone-3 setting.

PCC advised all the concern utilities to verify the zone 3 settings and review the settings with an intimation to ERPC Secretariat.

Members may update.

Deliberation in the meeting

PCC advised PRDC to resend the list of the lines to constituents.

PCC advised all the constituents to verify the zone 3 settings at the earliest.

ITEM NO. C.8: Schedule of training program to be conducted by PRDC

As per AMC, PRDC will conduct training on PDMS and PSCT in state utility premises of Eastern Region. Tentative schedule is given below:

Training in Month	State	Date
June'2018	Bihar	11/06/18 To 15/06/18
July'2018	West Bengal	09/07/18 To 13/07/18
August'2018	Odisha	20/08/18 To 24/08/18
September'2028	Jharkhand	17/09/18 To 21/09/18
October'2018	Sikkim	08/10/18 To 12/10/18

Accordingly, training was conducted at Patna from 11th June 2018 to 15th June 2018 and in West Bengal from 09th July 2018 to 13th July 2018.

Members may update.

Deliberation in the meeting

OPTCL informed that 22.06.18 being an official holiday, the proposed schedule for training from 20.08.18 to 24.08.18 could not be feasible.

It was agreed and finalized that the training will be conducted from 06.08.18 to 10.08.18 in Bhubaneswar, Odisha.

PCC advised all the concern state constituents of Odisha to attend the training.

ITEM NO. C.9: Non-Operation of 400 kV Binaguri-Rangpo D/C SPS on 9th May 2018

In 67th PCC, it was opined that as per the designed logic, SPS should operate in this case. PCC observed that the CB status of Binaguri end of 400kV Rangpo-Binagruri D/C line was not included to the SPS logic.

PCC advised Powergrid to incorporate the status of CBs of Binaguri along with the Rangpo status in SPS logic at the earliest.

PCC advised Powergrid to check the healthiness of the SPS scheme immediately.

PCC advised ERLDC to fix a date for SPS testing and coordinate with all the concern utilities for SPS testing.

Regarding implementation of SPS through SAS, Powergrid informed that the implementation would complete by July 2018.

PCC advised Powergrid to ensure the relevant data availability of SPS operation to ERLDC through SCADA.

In 69th PCC, Powergrid informed that the work is in progress.

Powergrid may update.

Deliberation in the meeting

Powergrid informed that the work is in progress.

ITEM NO. C.10: Disturbance at 400/220 kV Biharshariff S/s on 28-03-2018 at 18:43 hrs and 19-03-2018 at 02:02 hrs.

In 66th PCC, BSPTCL was advised to compute the fault level at Biharshariff (BSPTCL) substation and review the over current settings accordingly.

PCC advised BSPTCL and Powergrid to coordinate back up IDMT the over current settings at 220/132 kV ICTs with 440/220kV ICTs so that 220/132 kV ICTs would trip first for any downstream faults.

In 67th PCC, BSPTCL informed that they have computed the revised relay settings for Biharshariff S/s as per the fault level of the substation. They would incorporate the new settings by 24th May 2018.

PCC advised BSPTCL and Powergrid to ensure proper relay coordination between 400kV and 220 kV system including ICTs at Biharshariff S/s.

In 68th PCC BSPTCL informed that they have finalized the relay settings in coordination with Powergrid.

BSPTCL and Powergrid may update.

Deliberation in the meeting

BSPTCL informed that they are implementing the revised settings.

ITEM NO. C.11: Disturbance at 220/132 kV Patratu S/S on 09-02-2018 at 15:00 hrs

In 65th PCC, JUSNL was advised to take the following measures:

- Check the healthiness of the DC system including end to end cables at 220/132kV Patratu S/s
- Check the healthiness of all Circuit Breakers at 220/132kV Patratu S/s
- Check the healthiness of all the relays installed at 220/132kV Patratu S/s including 220/132kV ATRs
- Check Kanke end relay and CB of 132kV Patratu-Kanke line
- Check the Directional feature of 132 kV Hatia I – Sikidri and 132 kV Namkum - Hatia I line relays at Hatia-I

PCC advised TVNL to verify the zone 1 reach of 220kV Patratu-TVNL line as TVNL end should trip on zone 2 in this case.

In 66th PCC, JUSNL informed that they had visited 220/132kV Patratu S/s on 23rd April 2018 for physical inspection of protection system.

JUSNL added that the primary injection kit was defective hence they could not test the healthiness of the relays. They are planning to engage an agency for checking healthiness of the relays.

In 68th PCC, JUSNL was advised to comply the observations at the earliest.

JUSNL and TVNL may update.

Deliberation in the meeting

JUSNL was advised to comply the observations at the earliest.

ITEM NO. C.12: Disturbance at 220 kV Budhipadar S/s on 01-10-17 at 09:25 hrs

In 62nd PCC, OPTCL informed that Busbar protection maloperated and tripped all the elements connected 220kV bus 1 at Budhipadar.

OPTCL added that the issue has been referred to OEM (Siemens) for rectification.

In 63rd PCC, OPTCL informed that OEM (SIEMENS) visited the Substation on 29th December'2017 and taken the data (i.e. Trip Log, Even Log & DR) for analysis.

In 64th PCC, OPTCL informed that OEM, Siemens has recommended for updating of 7SS52_MCU device firmware version to V4.73 or higher to resolve the restart automatic problems. Accordingly, Siemens will upgrade the firmware.

In 68th PCC, *OPTCL informed that the rectification work is going on.*

OPTCL may update.

Deliberation in the meeting

OPTCL informed that the rectification work is going on.

ITEM NO. C.13: Repeated station black out in Sikkim

Repeated power failure at Gangtok and Melli in the month of May 2018 resulted interruption of power supply in the nearby region.Summary of major events are given in Table II. Sikkim may share corrective actions taken after these events.

Date	Time	Affected area	Antecedent condition	Summary	Load loss	Fault clearing time
10-05-18	17:05	Gangtok	132 kV Rangpo - Gangtok was under shutdown	132 kV Chujachen Gangtok S/C tripped in R-Y-N fault. Inclement weather was reported at the time of the incident	19	<100 ms
11-05-18	17:14	Gangtok	132 kV Rangpo - Gangtok was under shutdown	132 kV Chujachen Gangtok S/C tripped in Y-N fault due to Y phase LA failure at Gangtok end. Inclement weather was reported at the time of the incident	33	<100 ms
10-05-18	16:58	Melli, Kalimpong	132 kV Melli - Sagbari S/C is out since long due t problem at Sagbari end.	132 kV Melli Siliguri S/C and 132 kV Melli - Rangpo S/C tripped in R-Y-N fault. Inclement weather was reported at the time of the incident	32	700 ms
28-05-18	16:08	Melli, Kalimpong	132 kV Melli - Sagbari S/C is out since long due t problem at Sagbari end.	132 kV Melli Siliguri S/C and 132 kV Melli - Rangpo S/C tripped in R-Y-N fault. Inclement weather was reported at the time of the incident	25	600 ms

Table I: Summary of the major grid events occurred in Sikkim in the month of May 2018.

In 68th PCC meeting the agenda could not be discussed in detail as Sikkim representative was not present.

Sikkim may update.

Deliberation in the meeting

Sikkim representative was not present in the meeting.

ITEM NO. C.14: Issue of Protection Coordination Observed during Blackout of Tala on 23rd May 2018.

On 23rd May At 03:33 Hrs: 400 kV Binaguri-Talackt 4 tripped on Y-B phase to earth fault (Fault distance was 147.10 km from Binaguri end). At the same time 400 kV, Binaguri-Malbase ckt also tripped on B phase to earth fault however, it got successfully reclosed from Binaguri end. The circuit seems to have tripped from Malbase end. It can be seen that fault were located in the Bhutan side however details are not shared with ERLDC. The associated PMU plot is given.

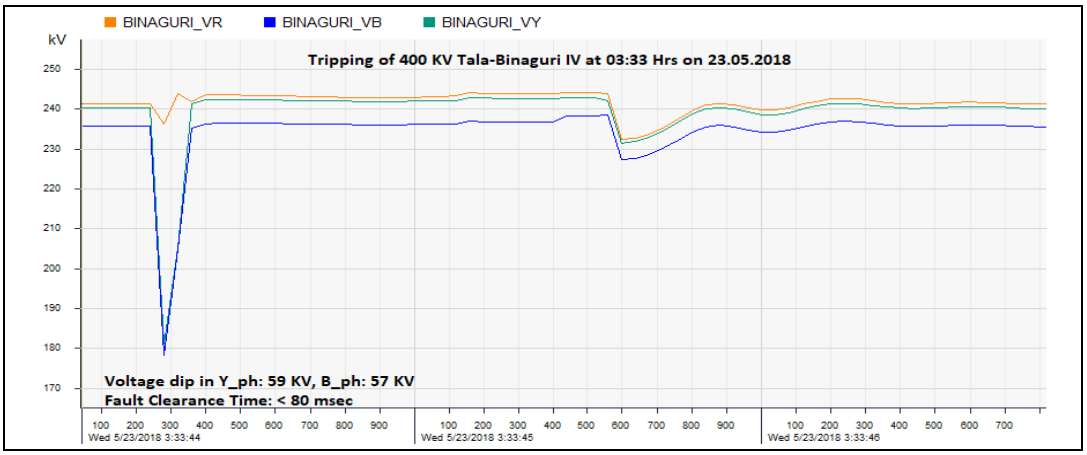

At 04:57 Hrs, 400 kV Binaguri-Tala 2 tripped on B phase to E/F (fault distance was 105.3 km from Binaguri). The circuit was kept idle charge from 0607 Hrs from Binaguri till the line isolator at Tala. In the meantime, 400 kV Binaguri-Tala circuit 1 was made out for planned shutdown by Bhutan.

At 08:53 Hrs:

- 400 kV Binaguri-Talackt 4 tripped from Binaguri end on B phase to E/F in zone 2 (location of fault was 124.5 km from Binaguri end). Initially carrier signal was received due to which only B phase opened and A/R function and timer has started. However, within the next 133 ms direct trip was received at Binaguri from Tala causing three-phase tripping at Binaguri end.
- It was observed that the 400 kV Binaguri-tala 4 circuit did not trip from Tala end resulting in fault feeding on this circuit from 400 kV Binaguri-Malbase circuit. 400 kV Binaguri-Malbase circuit has first fed the fault in zone 3 from Binaguri end however, with tripping of 400 kV Binaguri-Tala 4 from Binaguri end, sensed the same in zone 2 and tripped in next 500 ms. The fault location observed for this circuit from Binaguri end was 145 km indicating the fault of 400 kV Binaguri-Tala 4 ckt.

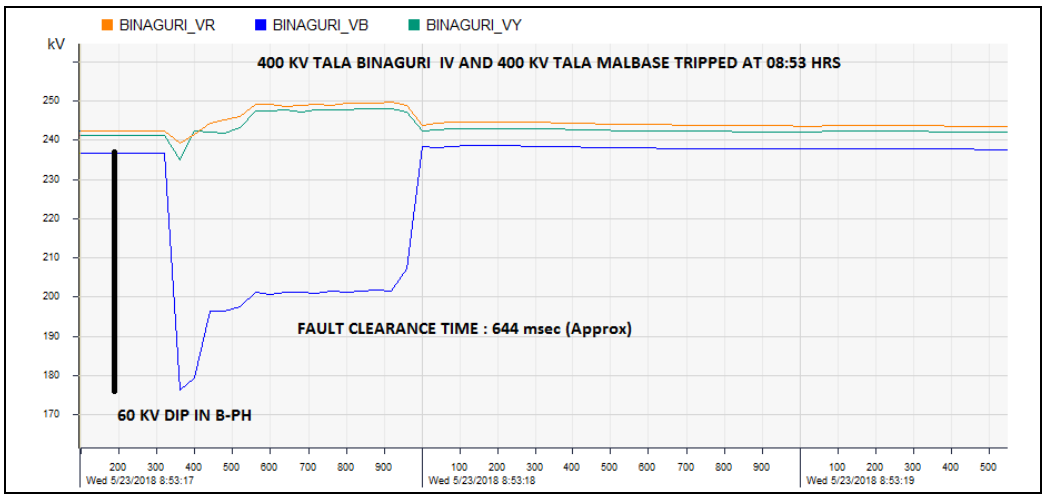

This led to blackout of 400 kV Tala substation causing loss of 447 MW generation. The tripping of 400 kV Malbase-Tala circuit is not shared with ERLDC as this circuit might also have tripped during the blackout of Tala generation.

The tripping at 0333 Hrs and 0853 Hrs, indicate several issues observed during the event in Bhutan side of the transmission line:

1. What was the nature of the fault on these transmission lines?
2. Whether 400 kV Binaguri-Malbase A/R operated at Malbase end at 03:33 Hrs?
3. Why the A/R has not occurred on 400 kV Binaguri-Talackt 2?
4. Why the 400 kV Tala did not clear the fault on 400 kV Binaguri-Tala circuit 4 ?
5. Why the Tala end has send the direct trip command for 400 kV Binaguri-Tala circuit 4 ?
6. On what protection the 400 kV Malbase-Tala circuit ha stripped at 0853 Hrs.

In 68th PCC meeting, the disturbances could not be discussed in detail as Bhutan representative was not present in the meeting.

Bhutan may update.

Deliberation in the meeting

PCC advised Bhutan representatives to submit a detailed report on the above disturbance to ERPC and ERLDC at the earliest.

ITEM NO. C.15: Interim Arrangement for substations that are not having bus bar protection In Eastern region

There may be 400 kV or 220 kV substations where either the bus bar is kept out of service for planned shutdown or bus bar protection is not available due to various reasons. Further, the older substations having static busbar scheme would also undergo replacement activity witha numerical scheme for which the bus bar protection will again be required to be withdrawn for a considerable time. Under such scenario, there is need of a mechanism to reduce the bus fault clearance time as the non-availability of bus bar protection can result in delayed fault clearance.In case of any issue of the protection system at remote substations,there may bea widespread outage.

In view of this, it is proposed to adhere to the following philosophy whenever the bus bar protection is kept out or is not available for a considerable amount of time at any 765/400/220 kV substation:

1. Zone 4 (Reverse Zone) timing of all the Lines to be reduced to 300 ms. The LBB should have a high priority or the reverse zone time should be set at least equal to LBB time setting.
2. Healthiness of the carrier protection of all lines is to be ensured.
3. Zone 4 timer reset should be checked in all the relays, as its function needs to be flawless.
4. DMT high set available in the numerical backup Overcurrent (O/C) relays of all the ICTs be properly set to clear the bus fault immediately. The backup O/C protection is coordinated with the upstream and downstream elements;therefore, it would not be possible to make it sensitive as suggested.
5. Bus Coupler overcurrent protection setting to be made lower. Whenever the Bus Bar protection is out the Buses should be operated in split bus mode, to have isolation of the elements on other Buses from feeding the Bus fault.
6. Re-trip feature if available in LBB should also be enabled to take one more attempt of breaker opening.
7. Healthiness of all Protection i.e. both Main and Backup shall be ensured.
8. All the Other Utilities at the remote ends be informed about the Bus Bar protection outage through ERLDC/respective SLDCs

In the case where two separate bus bar protections schemes are available at the substation as Main 1 and Main 2, then the above will not be applicable in the case of the outage of any one of the bus bar protection scheme.

In 65th PCC, all the constituents were advised to send their comments to ERPC and ERLDC.

PCC may discuss.

Deliberation in the meeting

PCC agreed to implement the proposed philosophy.

ITEM NO. C.16: Third Party Protection Audit

1. **Status of 1st Third Party Protection Audit:**

The compliance status of 1st Third Party Protection Audit observations is as follows:

Name of Constituents	Total Observations	Complied	% of Compliance
Powergrid	54	46	85.19
NTPC	16	14	87.50
NHPC	1	1	100.00
DVC	40	26	65.00
WB	68	49	72.06
Odisha	59	42	71.19
JUSNL	34	25	73.53
BSPTCL	16	5	31.25
IPP (GMR, Sterlite and MPL)	5	5	100.00

** Pending observations of Powergrid are related to PLCC problems at other end.*

The substation wise status of compliance are available at ERPC website (Observations include PLCC rectification/activation which needs a comprehensive plan).

Members may note.

Deliberation in the meeting

Members noted for compliance.

ITEM NO. C.17: Non-commissioning of PLCC / OPGW and non-implementation of carrier aided tripping in 220kV and above lines.

According to CEA technical standard for construction of electric plants and electric lines -Clause 43(4) (c), transmission line of 220 KV and above should have single-phase auto-reclosing facility for improving the availability of the lines. However, from the tripping details attached June-August, 2016 it is evident that the some of 220kV above Inter & Intra-Regional lines do not having auto-reclose facility either at one end or at both ends. Out of these for some of the lines even PLCC/OPGW is not yet installed and carrier aided protection including Autorecloser facility is not yet implemented. Based on the trippings of June- August, 2016 and PMU analysis a list of such lines has been prepared and as given below:

List of line where auto reclose facility is not available(Information based on PMU data analysis)							
S. No	**Transmission Lines name**	**Date of Tripping**	**Reason of Tripping**	**Owner Detail**		**Present Status**	
				End-1	**End-2**	**OPGW/PLCC Link available**	**AR facility functional**
13	220KV BUDIPADAR-KORBA-II	23.06.16	Y-N FAULT	OPTCL	CSEB	PLCC available	will be activated in consultation with Korba
17	220 KV TSTPP-RENGALI	17.07.16	EARTH FAULT	NTPC	OPTCL		by March 2018
18	220KV BUDIPADAR-RAIGARH	21.07.16	EARTH FAULT	OPTCL	PGCIL	PLCC defective	
19	400 KV KOLAGHAT-KHARAGPUR-II	03.08.16	Y-N FAULT	WBPDCL	WBSETCL		

20	220 KV FARAKKA-LALMATIA	03.08.16	B-N FAULT .	NTPC	JUNSL	Yes	Old Relay and not functional. 7-8 months required for auto re-close relay procurement.
23	220 KV MUZAFFARPUR - HAZIPUR - II	10.08.16	B-N FAULT	PGCIL	BSPTCL		Voice established. For carrier required shutdown
24	220 KV ROURKELA - TARKERA-II	11.08.16	B-N FAULT	PGCIL	OPTCL	OPGW available	Expected to install protection coupler by Jan 17
27	220 KV BIHARSARIF-TENUGHAT	07.09.16	B-N FAULT	BSPTCL	TVNL		
32	220KV Bidhannagar-Waria-II			WBSETCL	DVC		
33	220KV Jamshedpur-Jindal-SC						

34th TCC advised all the respective members to update the above list along with the last tripping status in next PCC meeting.

TCC further advised all the constituents to give the latest status of PLCC of other 220kV and above lines under respective control area.

OPTCL:

1. 220kV Rengali(PG)-Rengali S/Y (Proposal for Commn. in OPGW is pending): *PSDF appraisal committee accepted the proposal*
2. 220kV Indravati(PG)-Indravati(PH) (Proposal for Commn. in OPGW pending): *PSDF appraisal committee accepted the proposal*
3. 132kV Baripada(PG)-Baripada (Tendering in Progress for OPGW): *Contract awarded*
4. 132kV Baripada(PG)-Rairangpur (Tendering in Progress for OPGW): *Contract awarded*

BSPTCL:

1. 220kV Purnea (PG)-Madhepura line
2. 220 kV Biharshariff- Begusarai line
3. 220 kV Biharshariff- Bodhgaya line
4. 220kV MTPS-Motiari line

Work is in progress expected to be commissioned by December 2017.

5. 220KV Madhepura-New Purnea D/C — Auto recloser is out of service at Madhepura
6. 220KV Muzaffarpur-Hajipur D/C line — Auto recloser is out of service at Hazipur
7. 220KV FSTPP-Lalmatia-1 — Auto recloser is out of service at Lalmatia
8. 220KV Patna-Khagaul-SC — Auto recloser is out of service at Khagual

In 65th PCC, Powergrid informed that they will replace the Autorecloser relay of 400 kV Rourkela-Chaibasa 1 and 400 kV Meramundali-Sterlite 1 & 2 by April 2018.

In 67th PCC, BSPTCL informed that they are planning to hire an agency for implementing PLCC system in all the lines in their network.

Members may update the status.

Deliberation in the meeting

Members noted for compliance.

ITEM NO. C.18: Sequence of operation of HVDC Talcher-Kolar D/C line - ERLDC

ERLDC requested Powergrid and NTPC to submit the details of sequence operation of HVDC Talcher-Kolar D/C for a fault in the line along with the sequence of SPS operation.

In 67th PCC, Powergrid and NTPC agreed to submit the details.

In 68th PCC, Powergrid and NTPC were advised to submit the relevant details to ERLDC.

ERLDC, Powergrid and NTPC may update.

Deliberation in the meeting

PCC advised Powergrid and NTPC to submit the details to ERLDC.

ITEM NO. C.19: Checklist for submission of updated data for Protection Database

The network data in Protection Database needs to be updated on regular basis on account of commissioning of new elements in the CTU as well as STU networks. Accordingly a checklist has been prepared which is enclosed in **Annexure-C24**.

All the constituents requested to submit the checklist on monthly bases in every OCC/PCC meetings.

Constituents may note.

Deliberation in the meeting

Members noted.

Meeting ended with vote of thanks to the chair.

****

Participants in 69th PCC Meeting of ERPC

Venue: ERPC Conference Room, Kolkata Time: 10:30 hrs Date: 19.07.2018 (Thursday)

Sl No	Name	Designation/ Organization	Contact Number	Email	Signature
1	J. Bandyopadhyay	Member Secretary ERPC	9432326351	mserpc-power@gov.in	
2	P. Mukhopadhyay	ED, ERLDC	9869438073	pmukhopadhyay@posoco.in	
3	G. Mitra	DGM, ERLDC	9831297392		
4	SURAJIT BANERJEE	DGM, ERLDC	9433041823	surajit.banerjee@posoco.in	
5	S.K. SINGH	DGM, POWERGRID	8544401030	kisingh@powergrid india.com	
6	S. MAITI	S.D.E, DVC	7545867453	sudiptamaiti@gmail.com	S. Maiti
7	S.K. MISHRA	DGM (OS) NTPC, ER-II	9438233207	SKmishra05@ntpc.co.in	
8	S.P. RATH	NHPC Ltd TEESTA-V PS	8170005662	shektirathnhpc@gmail.com	
9	ANURAG ROY	NTPC LTD PATNA	9434028245	anuragroy@ntpc.co.in	
10	Kinley Wangmo	BPC / BPSO	+975 17644809	wangmok88@gmail.com	
11	Tshering Deki	BPC / BPSO	9757911449	tsheringdeki@bpc.bt	
12	Sudeep Kumar	Dy. Mgr / POWERGRID	9431820338	Sudeepkumar@powergridindia.com	
13	S.K. SAHU	CM / POWERGRID Odisha Projects	9078883643	SKsahu@powergridindia.com	
14	Amrit Nayak	GMR Kamalanga Energy Ltd.	7752020412	amrit.nayak2@gmrgroup.in	Amrit Nayak
15	Narendra Chauhan	AGM (O&M) / DMTCL	9206003284	narendra.chauhan@infra.essgroup.com	
16	RAJ PROTIM	Sr. Engr, ERLDC	9903329591	rayprotim@posoco.in	
17	CHANDAN KUMAR	Sr. Eng, ERLDC	9869251460	chandan@posoco.in	
18	Deepak Vinu	Sr. Eng POSOCO	9966917284	deepak.v@posoco.infotech.com	
19	Madhab Mukherjee	Sr. Engineer	7980594971	madhab.mukherjee@posoco infotech.com	
20	A. Sen Radhan	SE(E), DVC	9932719984	aditi.senpradhan@dvc.gov.in	

"Coming together is a beginning, staying together is progress, and working together is success." - Henry Ford

Participants in 69th PCC Meeting of ERPC

Venue: ERPC Conference Room, Kolkata Time: 10:30 hrs Date: 19.07.2018 (Thursday)

Sl No	Name	Designation/ Organization	Contact Number	Email	Signature
21	Sukdev Bal	Manager	9903188042	sukdevbal@powergrid india.com	
22	P.K. Bhattacharya	Director	9204 3123	p.k.bhattacharya@bendor-in.com	
23	B. SARKHEL	Consultant ERPC	9433065724		
24	S.P. Datta.	AGM, ERPC	94330 67022	spdatta@rediffmail.com.	
25	PRASHANT KUMAR	AEXE/BSPTCL	7763818080	prashantkumarsahay@yahoo.com	
26	SHIV SHANKAR MARDI	AEx6/JUSNL	6202991413	imtheshiv@gmail.com	
27	DOMAN RAM MAHTO	A.EX.E. JUSNL	9905576965	dromnmahto@gmail.com	
28	ARINDAM CHOUDHARY	AEE/BSPTCL	9572329275	ari010687@gmail	
29	D.K. DAS	ACE / WBSETCL	9434910544	cectdwbsetcl@gmail.com	
30	C.K. Haldar	ACE, WBSLDC	9434910379		
31	Chiranjib Bhowmik	DGM(EBI), HEL	9163321587	chiranjib.bhowmik@rp-sg.in	
32	VISWAJIT SEN	AM(CTMC) DPL	9474311956	viswajit.sen@gmail.com	
33	S.S. Nanda	DGM(E1) Elme Dirm. BumuOPTCL	9438907803	ele.ssnanda@optcl.co.in	19/7/18
34	H.P. Mahapatra	GM(E1) OHPC	7328840015	hpm.ohpc@gmail.com	
35	ARVIND NOGIA	Deputy Manager TUL	9571723462 771935 9977	AKNOGIA@GMAIL.COM	
36	Partha De	Chief Manager	HEL 9231011322	partha.de@rp-sg.in	
37	Arghya Ghoshal	Manager CESC Ltd	9007015362	arghya.ghosal@rp-sg.in	
38	Rajendra Prasad	TVNL	9031049930	rp.tlps@gmail.com	
39	DIPAK MODAK	SARTHAK COMPONENTS DIRECTOR	9007871595	dipak.modak@sarthakcomponents.com	
40	S. Goswami	Binder	9044403042		

"Coming together is a beginning, staying together is progress, and working together is success." –Henry Ford

Participants in 69th PCC Meeting of ERPC

Venue: ERPC Conference Room, Kolkata Time: 10:30 hrs Date: 19.07.2018 (Thursday)

Sl No	Name	Designation/ Organization	Contact Number	Email	Signature
41	SANTANU SEN	DGM	9903010750	santanu.sen@rp-sg.in	
42	RANDEEP BHATTACHARJEE	RE, BSPHCL KOLKATA	9830381689	rekolbsphcl@gmail.com	
43	Shri Mohan Jha	Consultant ERPC	9874738913	erpcjha@yahoo.co.in	
44	P. P. Jena	AEE, ERPC	9776198991	ppjena.erpc@gov.in	
45	SUCHARIT MONDAL	A. Manager (CBSE)	7595956952	sucharit.mondal@rp-sg.in	
46	J. G. Rao	EE, ERPC	9547891353	eceb_cea@yahoo.co.in	
47					
48					
49					
50					
51					
52					
53					
54					
55					
56					
57					
58					
59					
60					

"Coming together is a beginning, staying together is progress, and working together is success." –Henry Ford

SEQUENCE OF EVENTS OBSERVED at 21:52

Annexure-B2

21:52:15.442

- Line-1, B-phase trip.
- Fault current: 2055A.
- Distance not recorded by relay.

716 ms

21:52:16.159

- Line-2, B-phase trip.
- Fault Current: 2648A.
- Fault Distance: : 67.71km

1077 ms

21:52:16.52

- Line-1, B-phase Auto-reclose.

21:52:16.16

- Line-2, Subhashgram end breaker all three poles opened (current values in R & Y phases reduced to only the charging current)

25 ms

21:52:16.545

- Line-1 Lockout operated.
- Fault current: 4030A.
- Fault distance: 88.55km
- Fault distance recorded at S/G substation: 6.7km

1060 ms

21:52:17.22

- Line-2, B-phase auto reclose.

60 ms

21:52:17.28

- Line-2 Lockout operated.
- Fault Current: 3411A,
- Fault distance: 68.48Km.
- Fault distance recorded at S/G substation: 6.4km

DR of LINE -1

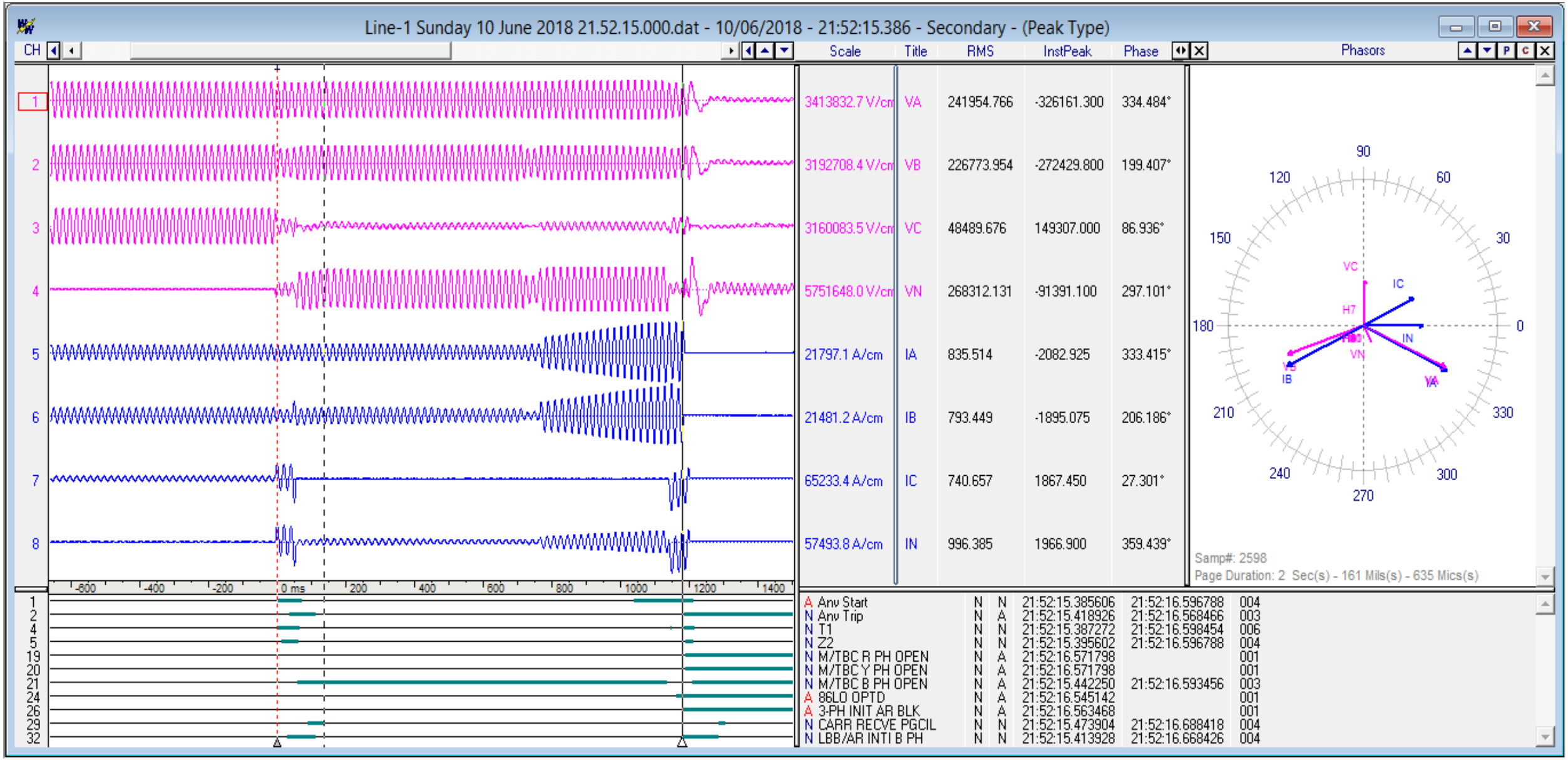
Line-1 Sunday 10 June 2018 21.52.15.000.dat - 10/06/2018 - 21:52:15.386 - Secondary - (Peak Type)
CH
Scale
Title
RMS
InstPeak
Phase
Phasors
1 3413832.7 V/cm VA 241954.766 -326161.300 334.484°
2 3192708.4 V/cm VB 226773.954 -272429.800 199.407°
3 3160083.5 V/cm VC 48489.676 149307.000 86.936°
4 5751648.0 V/cm VN 268312.131 -91391.100 297.101°
5 21797.1 A/cm IA 835.514 -2082.925 333.415°
6 21481.2 A/cm IB 793.449 -1895.075 206.186°
7 65233.4 A/cm IC 740.657 1867.450 27.301°
8 57493.8 A/cm IN 996.385 1966.900 359.439°
-600 -400 -200 0 ms 200 400 600 800 1000 1200 1400
90 120 60 150 30 180 0 210 330 240 300 270
VC IC H7 IN VN IB VA
Samp#: 2598
Page Duration: 2 Sec(s) - 161 Mils(s) - 635 Mics(s)
A Any Start N N 21:52:15.385606 21:52:16.596788 004
N Any Trip N A 21:52:15.418926 21:52:16.568466 003
N T1 N N 21:52:15.387272 21:52:16.598454 006
N Z2 N N 21:52:15.395602 21:52:16.596788 004
N M/TBC R PH OPEN N A 21:52:16.571798 001
N M/TBC Y PH OPEN N A 21:52:16.571798 001
N M/TBC B PH OPEN N A 21:52:15.442250 21:52:16.593456 003
A 86LO OPTD N A 21:52:16.545142 001
A 3-PH INIT AR BLK N A 21:52:16.563468 001
N CARR RECVE PGCIL N N 21:52:15.473904 21:52:16.688418 004
N LBB/AR INTI B PH N N 21:52:15.413928 21:52:16.668426 004
400KV HALDIA SS
Sun - 10/06/2018 21:52:16.5643
Delta X: 1.178 secs (58.935 cyc @ 50
fs: 1200.48 Hz
AS: ON
Delta Y: No Bars

DR of LINE -2

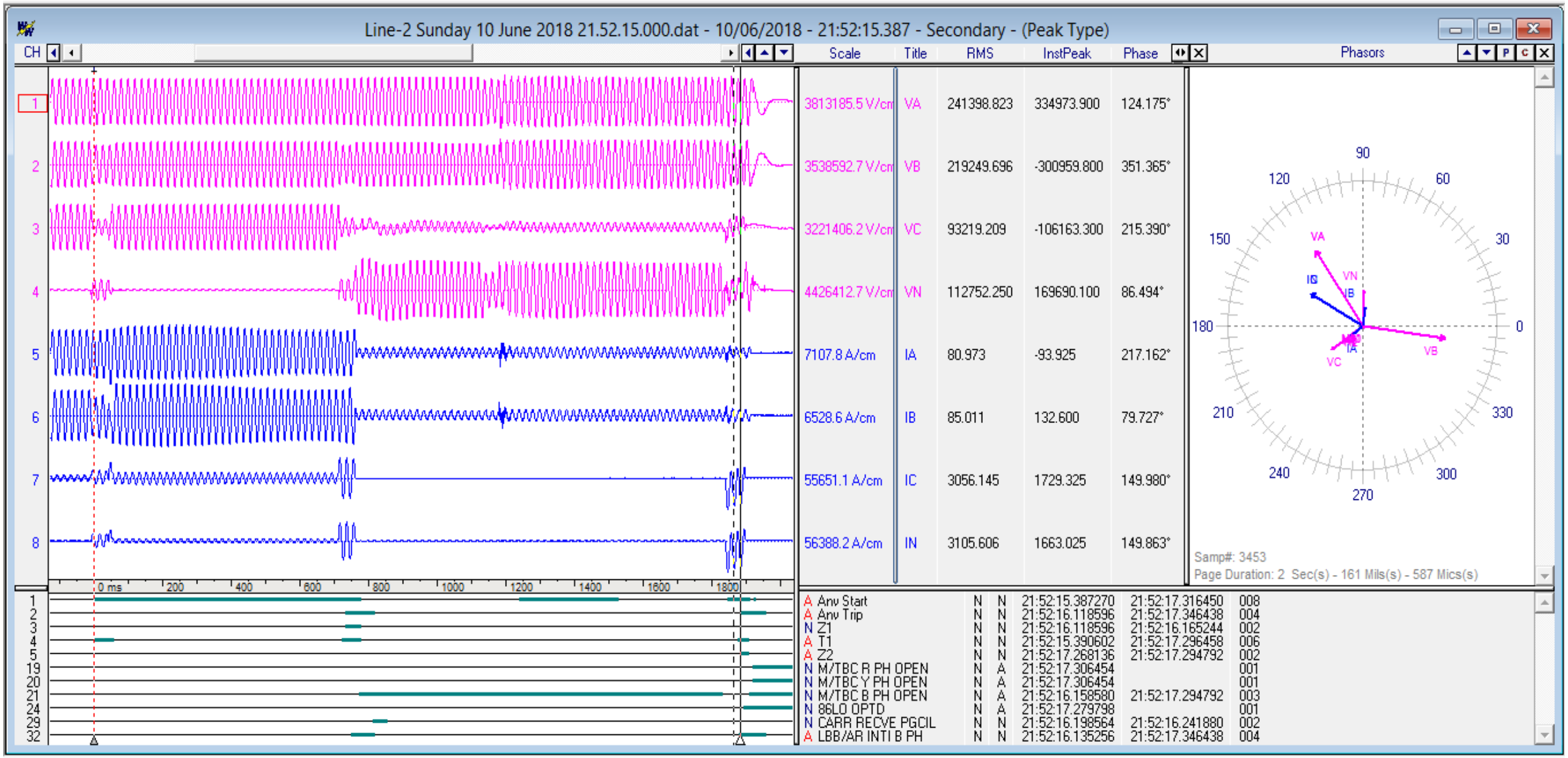
Line-2 Sunday 10 June 2018 21.52.15.000.dat - 10/06/2018 - 21:52:15.387 - Secondary - (Peak Type)
CH
Scale
Title
RMS
InstPeak
Phase
Phasors
1 3813185.5 V/cm VA 241398.823 334973.900 124.175°
2 3538592.7 V/cm VB 219249.696 -300959.800 351.365°
3 3221406.2 V/cm VC 93219.209 -106163.300 215.390°
4 4426412.7 V/cm VN 112752.250 169690.100 86.494°
5 7107.8 A/cm IA 80.973 -93.925 217.162°
6 6528.6 A/cm IB 85.011 132.600 79.727°
7 55651.1 A/cm IC 3056.145 1729.325 149.980°
8 56388.2 A/cm IN 3105.606 1663.025 149.863°
0 ms 200 400 600 800 1000 1200 1400 1600 1800
90 60 30 0 330 300 270 240 210 180 150 120
VA VB VC VN IA IB IC
Samp#: 3453
Page Duration: 2 Sec(s) - 161 Mils(s) - 587 Mics(s)
A Anv Start N N 21:52:15.387270 21:52:17.316450 008
A Anv Trip N N 21:52:16.118596 21:52:17.346438 004
N Z1 N N 21:52:16.118596 21:52:16.165244 002
A T1 N N 21:52:15.390602 21:52:17.296458 006
A Z2 N N 21:52:17.268136 21:52:17.294792 002
N M/TBC R PH OPEN N A 21:52:17.306454 001
N M/TBC Y PH OPEN N A 21:52:17.306454 001
N M/TBC B PH OPEN N A 21:52:16.158580 21:52:17.294792 003
N 86LO OPTD N A 21:52:17.279798 001
N CARR RECVE PGCIL N N 21:52:16.198564 21:52:16.241880 002
A LBB/AR INTI B PH N N 21:52:16.135256 21:52:17.346438 004

Other Important Information

- Amount of Energy Unserved : Zero
- Amount of Generation Loss : 550 MW
- Fault distance from Subhashgram recorded at PGCIL : 6-8 km (both lines)
- Inclement weather with rain and frequent lighting reported
- Prolong fault suspected in same location for both the lines
- PGCIL patrolling feedback : No deterministic cause found
- Discrepancy in protection operation at Subhashgram corrected by PGCIL

Annexure-B6

List of line tripping in the month of June 2018 which may be discussed in PCC

LINE NAME	TRIP DATE	TRIP TIME	RESTORATION DATE	RESTORATION TIME	Relay Indication LOCAL END	Relay Indication REMOTE END	Reason	Fault Clearance time in msec	Auto Recloser status	PCC Comments	Follow up : Utility to respond
Multiple tripping at the same time											
220KV BUDHIPADAR-RAIGARH-I	10-06-2018	2:40	10-06-2018	4:01	Z1, BN, 9.8 KM, 5.39 KA	Distance protection Zone 1.	B-N FAULT	< 100 msec	No A/R operation found in PMU	No A/R is observed. OPTCL will communicate with CSPTCL and Update in the PCC on regular basis.	OPTCL
220KV BUDHIPADAR-KORBA-II	10-06-2018	2:40	10-06-2018	4:02	Z1, BN, 9.3 KM, 5.27 KA	Idle charge from Budhipadar end	B-N FAULT	< 100 msec	No A/R operation found in PMU	OPTCL to adopt Idle charge setting of line and will confirm ERLDC regarding the readiness of Protection coordination in respect to LILO of line at Raigarh (WR)	OPTCL
220KV MAITHON-DUMKA-I	14-06-2018	17:31	14-06-2018	18:38	R-N, 3.6 km, 21.09 kA	Tripped from Dumka end	R-N FAULT	< 100 msec	No A/R operation found in PMU	Jharkhand CRITIL team will provide the status and details of the tripping in next 7 days after PCC.	JUSNL
220KV MAITHON-DUMKA-II	14-06-2018	17:31	15-06-2018	9:41	Y-N, 1.9 km, 21.44 kA	Tripped from Maithon end	Y-N FAULT	< 100 msec	No A/R operation found in PMU	Jharkhand CRITIL team will provide the status and details of the tripping in next 7 days after PCC.	JUSNL
220KV RAURKELLA-TARKERA-I	15-06-2018	12:54	15-06-2018	13:50	R-Y-N, 15.3 KM,R=5.855 KA, Y=8.519 KA		R-Y-N Fault	500 msec		OPTCL will confirm the zone 2 setting for this line and will revert back to PCC.	OPTCL
220KV RAURKELLA-TARKERA-II	15-06-2018	12:54	15-06-2018	13:37	Did not trip	TRIPPED FROM TARKERA END	TRIPPED FROM TARKERA END Only	500 msec		OPTCL team will provide the status and details of the tripping in next 7 days after PCC.	OPTCL
400KV MENDHASAL-PANDIABILI-II	20-06-2018	16:12	20-06-2018	16:50	Zone 2, 37.83 kA, TRIPPED FROM MENDHASAL END ONLY	Did not trip	TRIPPED FROM MENDHASAL END ONLY	< 100 msec	No A/R operation found in PMU	PGCIL Orissa will confirm the Cause of Zone 2 tripping at Mendhasal end to PCC.	PGCIL Orissa Project
400KV MENDHASAL-PANDIABILI-I	20-06-2018	16:12	20-06-2018	16:50	Y-N , .7 kA, TRIPPED FROM MENDHASAL END ONLY	Y Phase to E/F, 24.5 km, 5.8 kA Successfully A/R	TRIPPED FROM MENDHASAL END ONLY	< 100 msec	No A/R operation found in PMU	A/R issue at Mendhasal end and OPTCL will update the issue to PCC and action taken.	OPTCL
Miscellaneous: Tripping on DT, No Fault observed in PMU											
400KV TSTPP-RENGALI-I	09-06-2018	9:46	09-06-2018	13:20	DT RECEIPT AT TALCHER		DT RECEIVED AT TALCHER		No fault observed in PMU	PGCIL Orissa will update on the cause of tripping to PCC in next 7 days.	PGCIL Orissa Project
400KV NEW PPSP-NEW RANCHI-I	20-06-2018	9:39	20-06-2018	9:58	DT RECEIPT AT PPSP		DT RECEIVED AT PPSP		No fault observed in PMU	PGCIL with WBSETCL will check on the issue of DTPC and report to PCC in next 7 days.	PGCIL and WBSETCL
Autoreclose related issues											
400KV RANCHI-RAGHUNATHPUR-II	07-06-2018	12:37	07-06-2018	13:13	RN, 3.3 KM, 16.45 KA	RN, 1.859 KA	R-N FAULT	< 100 msec	No A/R operation found in PMU	DVC may kindly update on the status.	DVC
400KV RANCHI-RAGHUNATHPUR-II	08-06-2018	12:08	08-06-2018	13:28	RN, 85.7 KM, 3.75 KA	RN, 24.71 KM, 8.47 KA	R-N FAULT	< 100 msec	No A/R operation found in PMU	Issue at DVC end. DVC resolved the issue hghowever A/R scheme still need correction. DVC may kindly update on regular interval.	DVC
220KV MAITHON-DHANBAD-II	07-06-2018	11:58	07-06-2018	12:14	BN, 47.23 KM, 1.154 KA	A/R SUCCESSFUL	B-N FAULT	400 msec	No A/R operation found in PMU	DVC may kindly check the issue and confirm to PCC In next 7 days.	DVC
220KV MAITHON-DHANBAD-II	07-06-2018	13:40	07-06-2018	13:59	B-N, 43.46 KM, 1.616 KA	A/R SUCCESSFUL	B-N FAULT	400 msec	No A/R operation found in PMU	DVC may kindly check the issue and confirm to PCC In next 7 days.	DVC
220KV MAITHON-DHANBAD-I	20-06-2018	15:58	20-06-2018	16:05	R_N, F.D. 40 KM, F.C. 3.02 kA, A/r successful		R-N FAULT		No A/R operation	DVC may kindly check the issue and confirm to PCC In next 7 days.	DVC

LINE NAME	TRIP DATE	TRIP TIME	RESTORATION DATE	RESTORATION TIME	Relay Indication LOCAL END	Relay Indication REMOTE END	Reason	Fault Clearance time in msec	Auto Recloser status	PCC Comments	Follow up : Utility to respond
765KV FATEHPUR-PUSAULI-I	17-06-2018	17:37	17-06-2018	19:15	R-N fault. FD: 254.5kM FC: 2.7kA	67.96 km,2.306 KA,R_N	R-N FAULT	< 100 msec	No A/R operation found in PMU	Receipt of DT from Fatehpur end. Sucessive fault at 600 ms. To be verified.	PGCIL ER-I
400KV MEERAMUNDALI-STERLITE-II	01-06-2018	12:21	01-06-2018	13:08		Z-1 , B-N, F.C-1.875 KA , F.D -163.1 km. A/R sucessful	B-N FAULT	< 100 msec	No A/R operation found in PMU	DR shared by Orissa is not complete. DR recording Period should be increased to 3-5 seconds. A/r issue at Sterlite end. OPTCL will update the line A/R healthiness at Sterlite end.	OPTCL
400KV BIHARSARIFF(PG)-MUZAFFARPUR(PG)-II	12-06-2018	15:33	12-06-2018	16:18	B_N, 21.36 KM, 12.14 kA	B_N, 8.43 KM, 4.028 kA	B-N FAULT	< 100 msec	No A/R operation found in PMU	DR not received so ERTS-1 may kindly share the details with ERLDC/ERPC in next 2 days.	PGCIL ER-I
400KV PATNA-KISHANGANJ-I	12-06-2018	15:59	12-06-2018	16:32	Y_N, 83.6 KM, 4.5 kA	Y_N, 237.6 KM, 1.1 kA	Y-N FAULT	< 100 msec	A/R unsuccessful, but timing issue	A/R timing issue to be corrected and intimation to be given to PCC by ERTS-1.	PGCIL ER-I
220KV TTPS-TSTPP-SC	07-06-2018	15:10	07-06-2018	16:36		ZI, B-N, 12.9KA, 4.8KM	B-N FAULT	< 100 msec	No A/R operation found in PMU	OPTCL will update the status on A/R status	OPTCL
220KV BARIPADA-BALASORE-I	08-06-2018	15:44	08-06-2018	16:14	R-N ,53 KM ,2.5KA	R-N, Zone 1 , 2 kA	R-N FAULT	< 100 msec	No A/R operation found in PMU	OPTCL will update the status on A/R status	OPTCL
220KV STPS(WBSEB)-CHANDIL-SC	20-06-2018	16:42	27-06-2018	17:04	Y-N FAULT		Y-N FAULT	< 100 msec	No A/R operation found in PMU	JUSNL and WBSETCL will update in 2 days on the issue to the PCC.	JUSNL and WBSETCL
220KV KATAPALLI-BOLANGIR(PG)-SC	21-06-2018	19:35	21-06-2018	19:59	R-N, Z1, 3.82 kA, FD 50.59KM	R-N, FC 1.42 KA, Z1, FD 41.4 KM	R-N FAULT	< 100 msec	No A/R operation found in PMU	No A/R in Katapali end observed. Further there is a delay of 100 ms in zone 1 observed from DR at Katapali end. OPTCL may kindly analyse and take corrective action and inform PCC.	OPTCL
220KV DALKHOLA-SILIGURI-II	21-06-2018	23:06	21-06-2018	23:22	B-N,Z1,FD=44.5 KM,FC 2.33KA	B-N,Z1,FD=32.19KM,FC =4.266KA.A/R SUCCESSFUL	B-N FAULT	< 100 msec	No A/R operation found in PMU	Dalkhola end : No A/R may kindly be exolained	PGCIL ER-II

Annexure-C.1.1

ISLANDING SCHEME FOR IB THERMAL – BUDHIPADAR GSS

ISLANDING SCHEME DESCRIPTION

1. Islanding schemes are implemented by generating stations & transmission system to isolate the healthy subsystems following a large-scale disturbance. This is a system requirement under contingency conditions according to which the power network may be split into healthy and self-sustaining zones so that cascade tripping of all generating stations in the entire region is avoided.
2. With a view to protect the generation of IB TPS during sudden and major disturbance in power system network, one special islanding scheme with part loads of Budhipadar GSS of OPTCL has been proposed.
3. Two numbers 210 MW generators of IB TPS connect to 220/132/33kV Grid substation through four numbers dedicated 220kV lines.
4. The islanding scheme envisages segregation of a group of matching 132kV load in closed loop with the IB generators.

ISLANDING SCHEME DESCRIPTION

5. 132kV feeders will be arranged radially in order to form islanding scheme with IB generation.
6. 220kV Budhipadar GSS has system has two main bus and a transfer bus system. The generation & matching loads put into two buses with bus coupler in operation.
7. The two numbers 220kV feeders from IB TPS put into Bus –II and the other two are kept in the other bus as normal arrangement.
8. 220 kV interstate line to Korba-2 & 3 and Raigarh will be in normal condition distributed to both the buses.
9. The islanding relay Micom P341 is installed at Bus coupler panel of the 220kV system.

ISLANDING SCHEME DESCRIPTION

10. In the event of system disturbance and actuation of islanding relay:

a. Relay will give command to trip all 220KV feeders connected to Bus-I and Bus II along with Bus coupler except selected islanding IB ckts. either (IB -1 & 3)/ (IB-2 & 4) and Auto transformer- I & II.
b. It will also trip non- selected islanding IB ckts. incomer breaker either (IB -1 & 3)/ (IB-2 & 4).
c. It will send carrier command to Tarkera end and to trip 132kV Tarkera –Rajgangpur feeder I & II and 132kV Tarkera- Kalunga feeder so as to feed Rajgangpur , Kuchinda and Kalunga Grid Load will be in radial arrangement.
d. It will send carrier signal to Lapanga end to trip 132kV Lapanga – Jharsuguda feeder at Lapanga in order to feed Jharsuguda load radially.
e. It will send carrier signal to IB thermal to start ramping and adjust IB generation to match the load.

ISLANDING SCHEME DESCRIPTION

11. The CGP feeders such as Vedanta , Bhusan and Aditya Aluminium have their own islanding schemes to cater their industry load.

12. The general arrangement of 220kV feeder configuration, 132kV loads for islanding has shown in following slides.

POWER FLOW DETAILS OF 220KV SYSTEM

LOAD PATTERN OF DIFFERENT FEEDERS 12.07.2018 AT 12.00 HRS.

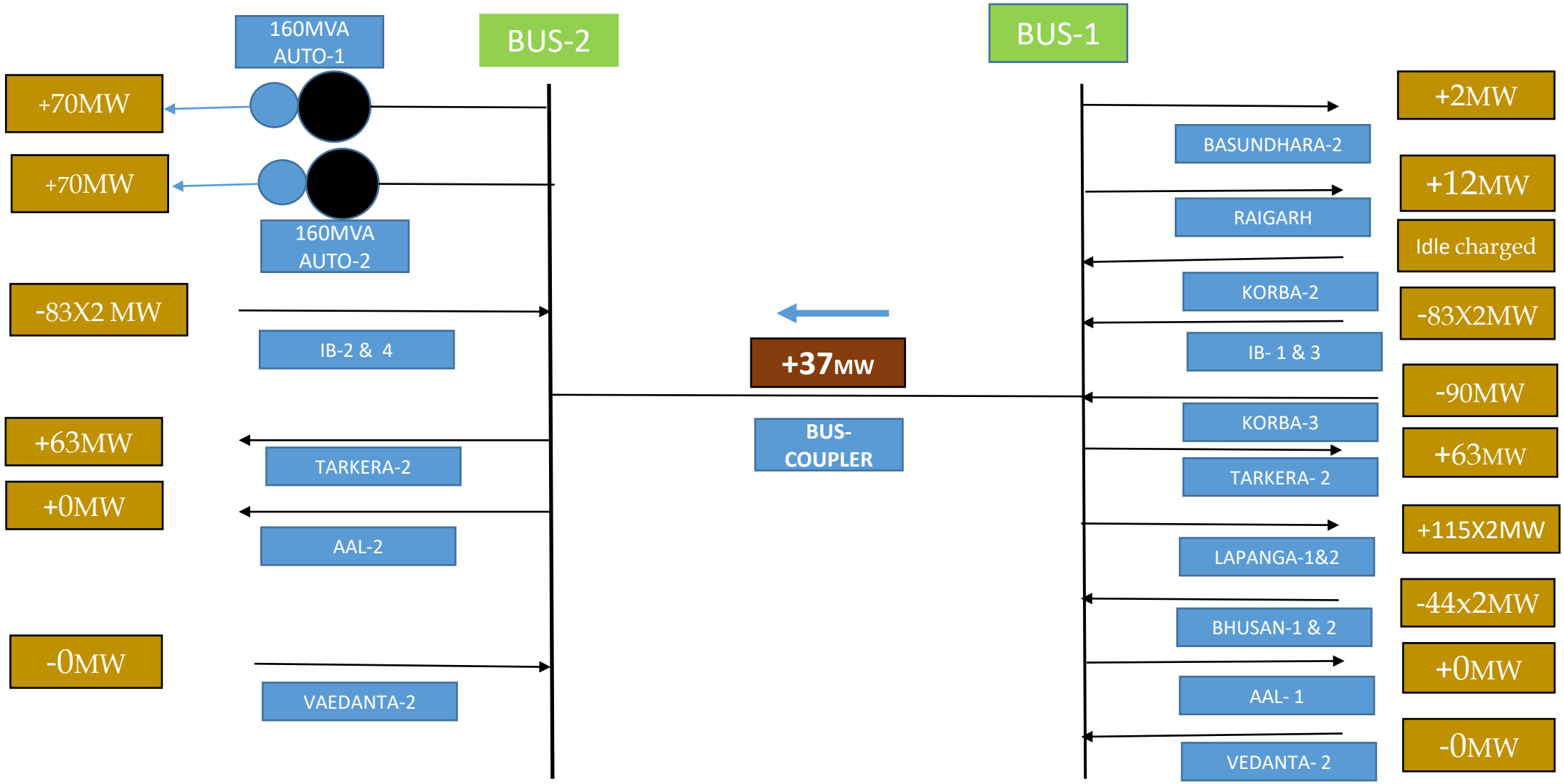

132kV RADIAL LOAD ARRANGEMENT FOR ISLAND SCHEME

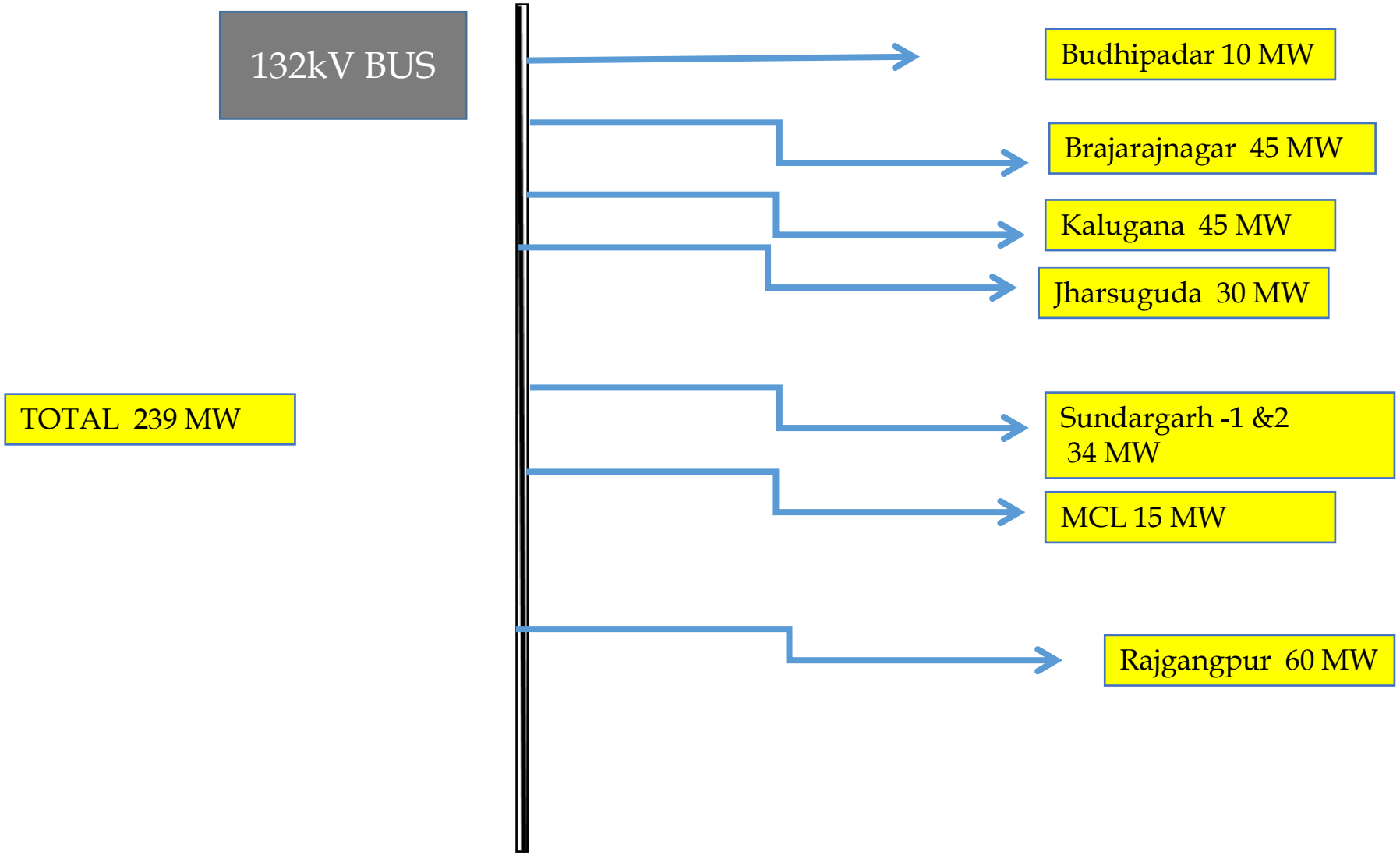

132KV Connectivity of Budhipadar GSS

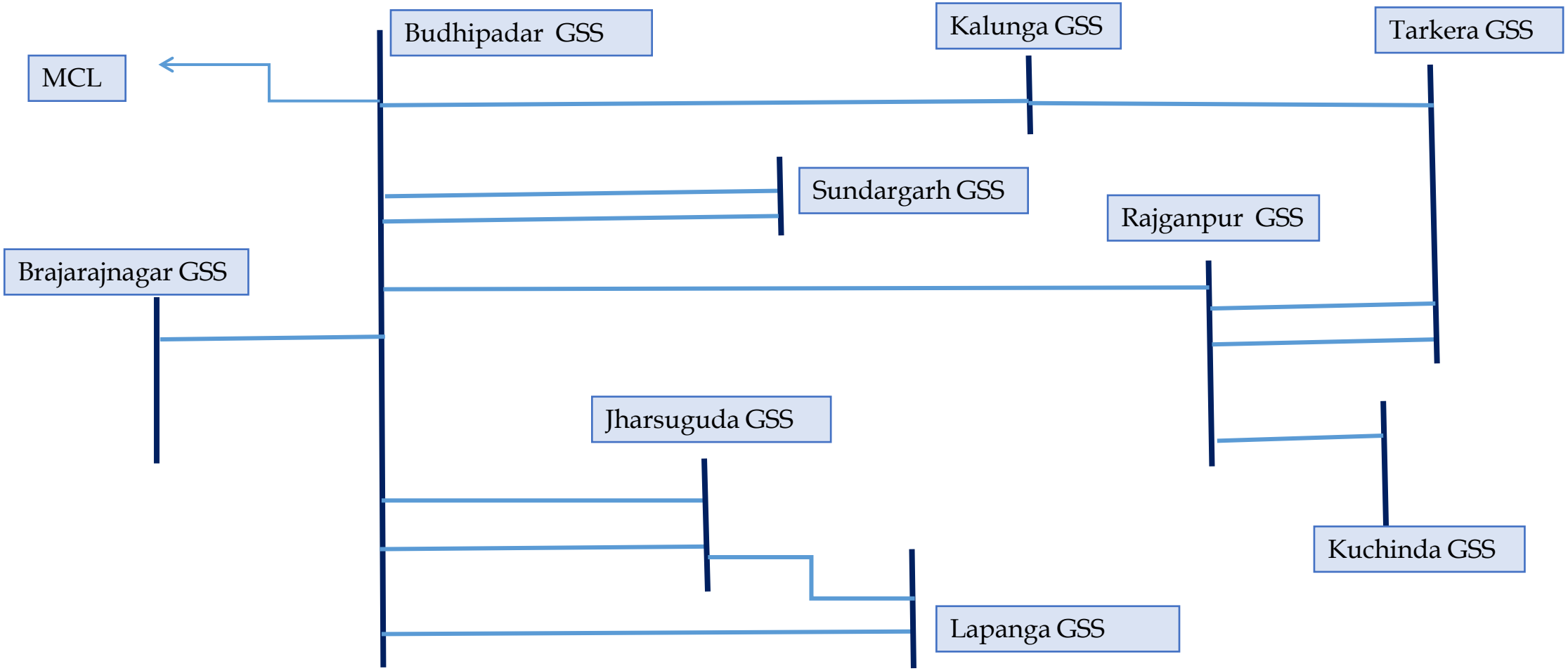

ISLANDING LOAD ARRANGEMENT,

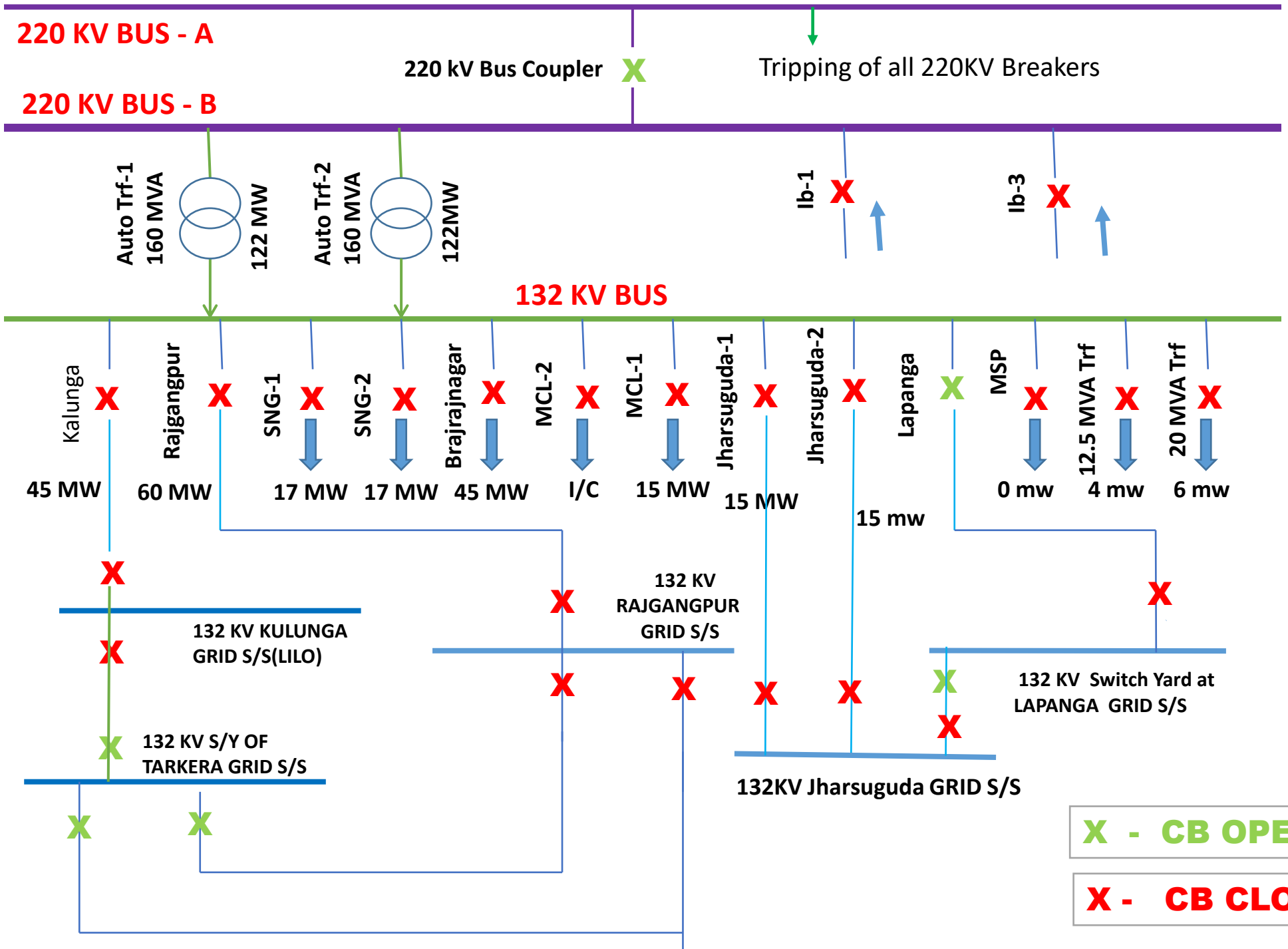

SCHEMATIC DRAWING OF ISLANDING RELAY INSTALLED IN B/C PANEL FOR TRIPPING OF DIFFERENT FEEDERS AT BUDHIPADAR GRID S/S.

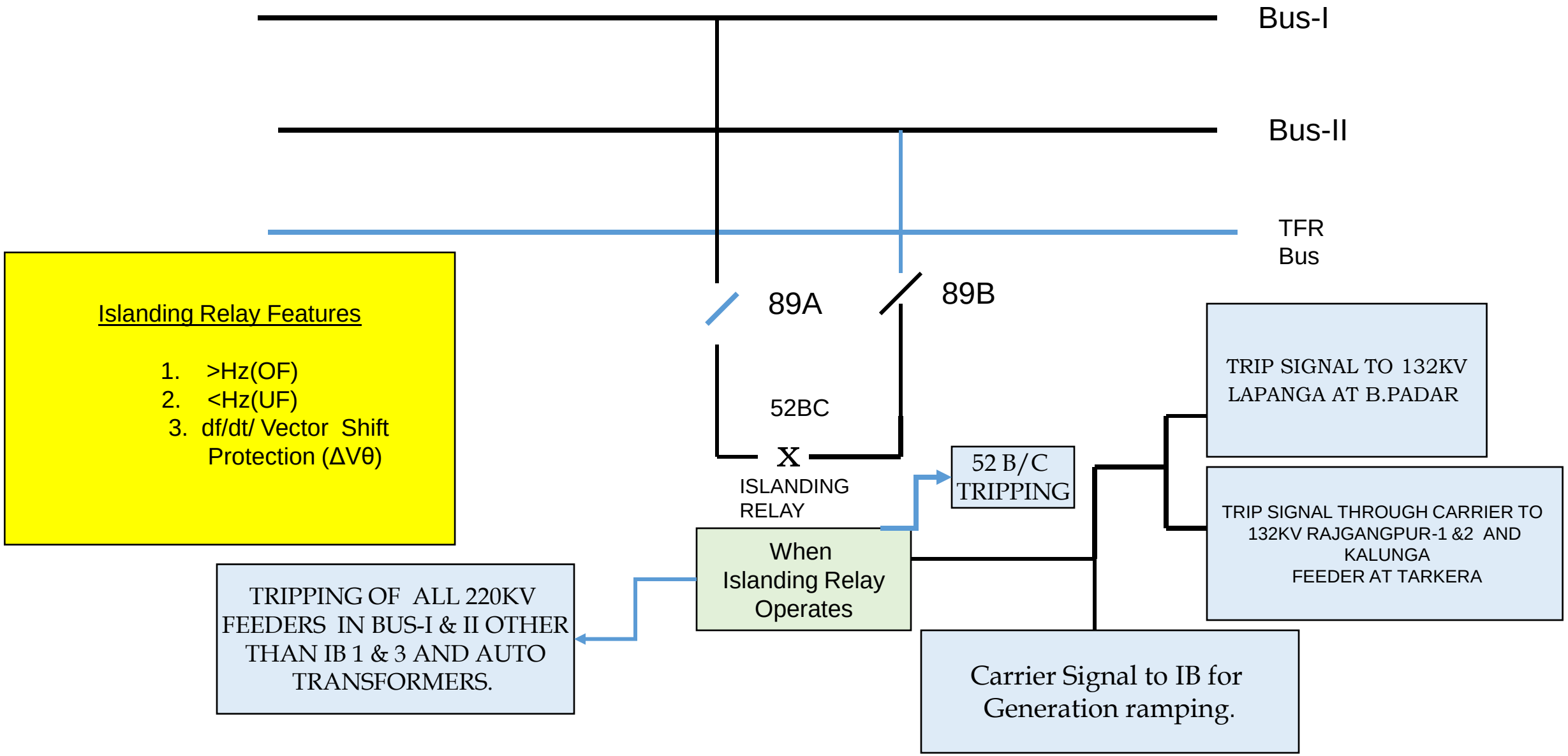

CONNECTION DIAGRAM OF ISLANDING RELAY (Micom P341) AT BUDHIPADAR SUB-STATION

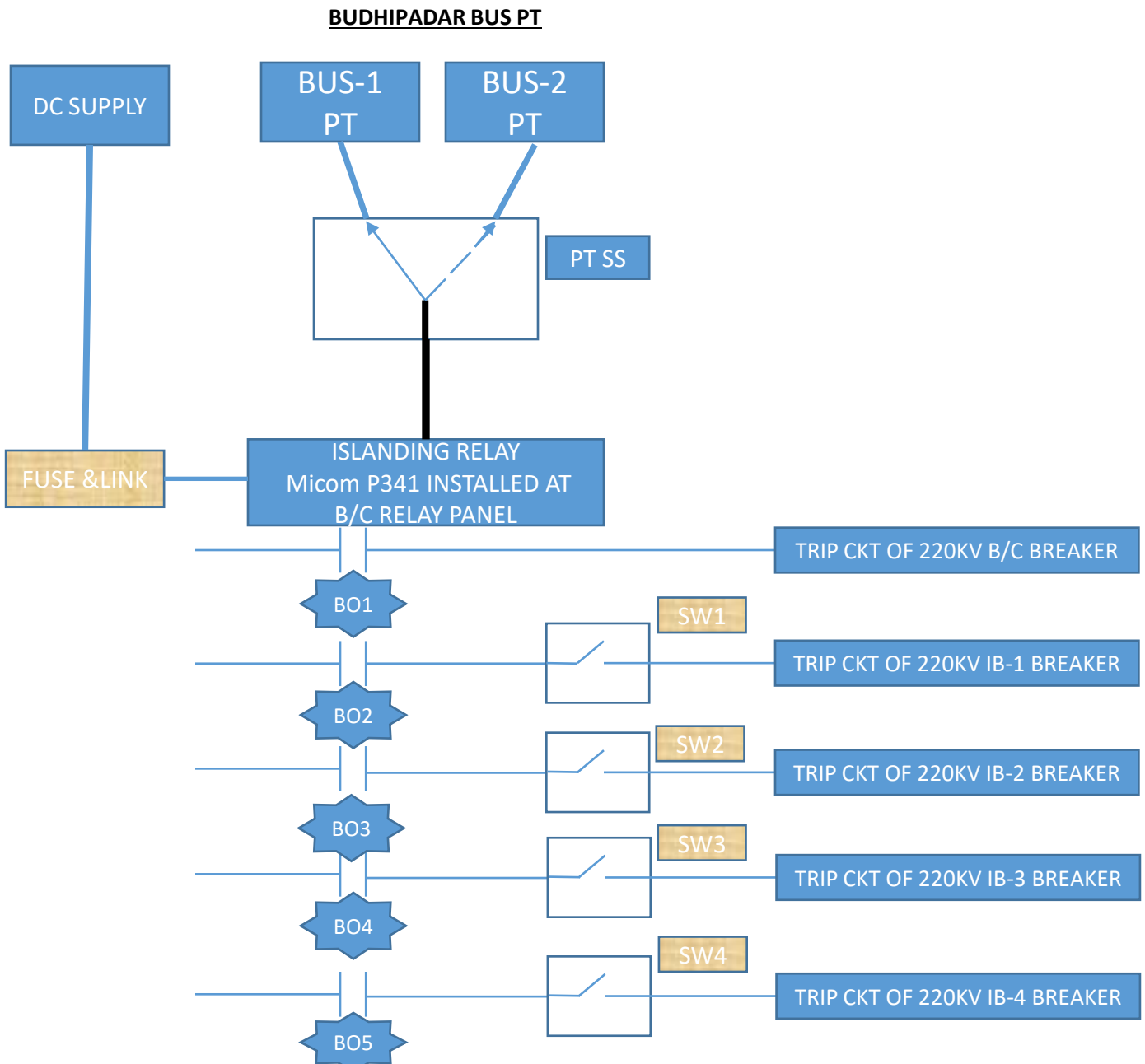

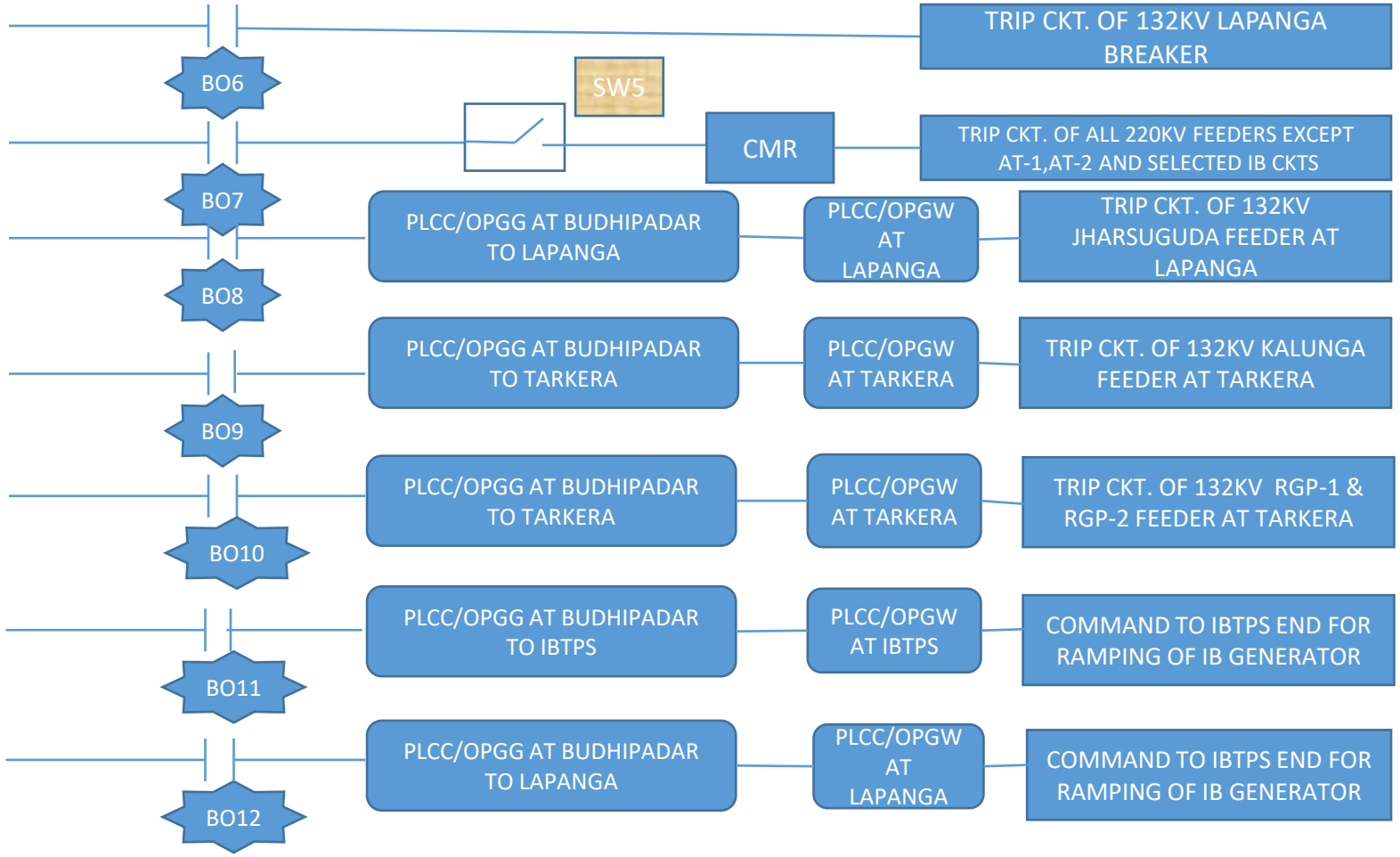

LEGEND

PTSS---- PT SELECTOR SWITCH

SW1-----SW5- ON/OFF SWITCH

CMR– CONTACT MULTIPLICATION RELAY

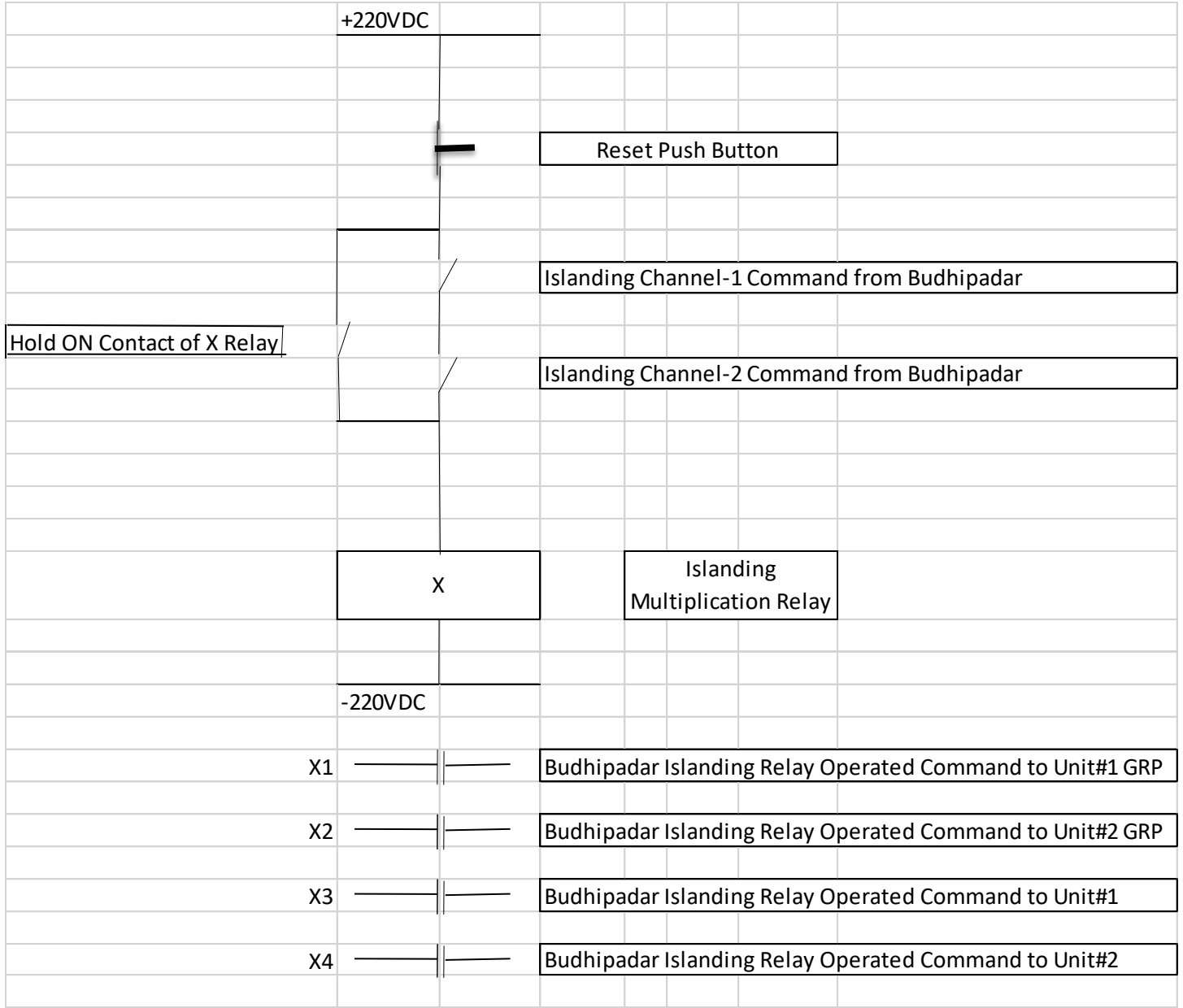

ISLANDING MULTIPLICATION RELAY CONFIGURED IN IBTPS CONTROL ROOM

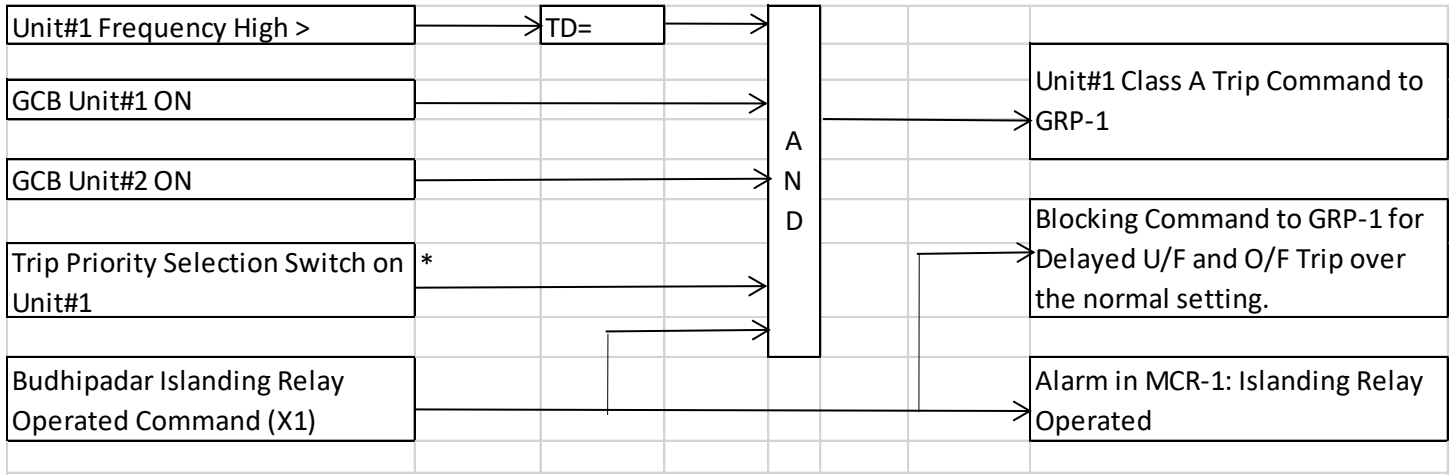

Hardware single selection switch (3 position: I, OFF, II) for both units installed on one GRP.

PRIORITY TRIPPING SCHEME CONFIGURED IN GRP-1 NUMERIC RELAY

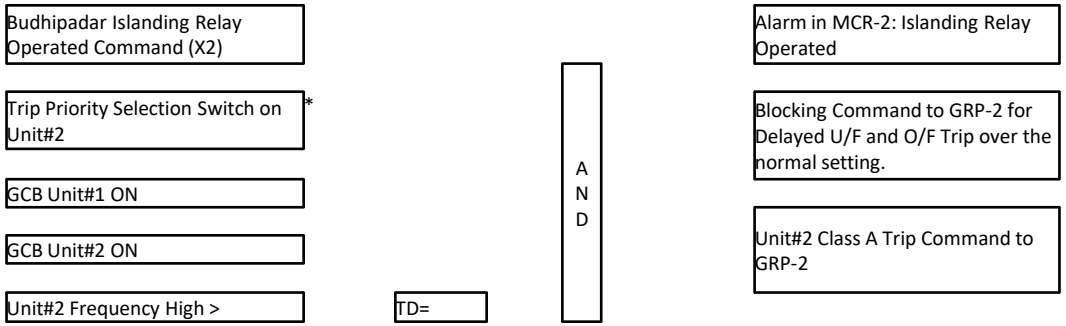

*Hardware single selection switch (3 position: I, OFF, II) for both units installed on one GRP.

PRIORITY TRIPPING SCHEME CONFIGURED IN GRP-2 NUMERIC RELAY

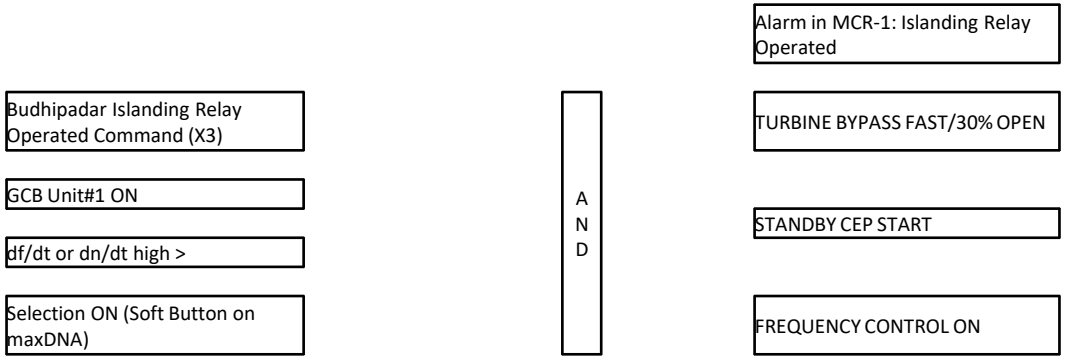

LOAD-GENERATION BALANCE SCHEME CONFIGURED IN UNIT#1 MAXDNA CONTROL SYSTEM

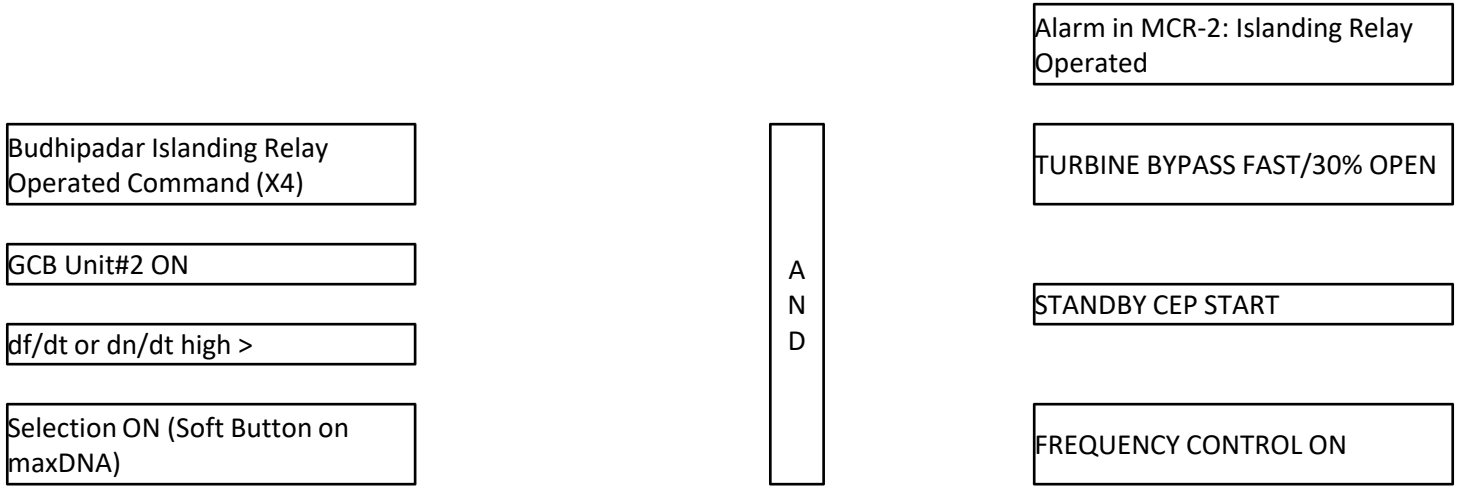

LOAD-GENERATION BALANCE SCHEME CONFIGURED IN UNIT#2 MAXDNA CONTROL SYSTEM

NOTES ON INTERCONNECTING RELAY FUNCTION.

Over voltage protection

An over voltage condition could arise when a generator is running but not connected to a power system, or where a generator is providing power to an islanded power system. Such an over voltage could arise in the event of a fault with automatic voltage regulating equipment or if the voltage regulator is set for manual control and an operator error is made. Over voltage protection should be set to prevent possible damage to generator insulation, prolonged over-fluxing of the generating plant, or damage to power system loads.

Under frequency protection

Under frequency operation of a generator will occur when the power system load exceeds the prime mover capability of an islanded generator or group of generators. Power system overloading can arise when a power system becomes split, with load left connected to a set of ‘islanded’ generators that is in excess of their capacity. Automatic load shedding could compensate for such events. In this case, under frequency operation would be a transient condition. This characteristic makes under frequency protection a simple form of “Loss of Mains” protection on system where it is expected that the islanded load attached to the machine when the grid connection fails exceeds the generator capacity.

Over frequency protection function

Over frequency running of a generator arises when the mechanical power input to the alternator is in excess of the electrical load and mechanical losses. The most common occurrence of over frequency is after substantial loss of load. When a rise in running speed occurs, the governor should quickly respond to reduce the mechanical input power, so that normal running speed is quickly regained.

Rate of Change of Frequency Protection (81R)

The two main applications for df/dt protection are network decoupling (loss of mains/loss of grid) and load shedding. During severe disturbances, the frequency of the system oscillates as various generators try to synchronize on to a common frequency. The frequency decay needs to be monitored over a longer period of time and time delayed df/dt can be used to make the correct decision for load shedding or provide early warning to the operator on a developing frequency problem.

Voltage Vector Shift Protection (ΔVθ)

The Voltage Vector Shift protection element measures the change in voltage angle over successive power system half-cycles. The element operates by measuring the time between zero crossings on the voltage waveforms. A measurement is taken every half cycle for each phase voltage. Over a power system cycle this produces 6 results, a trip is issued if 5 of the 6 calculations for the last power system cycle are above the set threshold. Checking all three phases makes the element less susceptible to incorrect operation due to harmonic distortion or interference in the measured voltage waveform.

The fast operation of this vector shift function renders it to operate at the instant of a disturbance rather than during a gradual change caused by a gradual change of power flow. Operation can occur at the instant of inception of the fault,at fault clearance or following non-synchronized reclosure, which affords additional protection to the embedded generator.


Thank
you

400/132 kV Motihari(DMTCL) and 400/220 kVDarbhanga(DMTCL) Substation Auidt Findings and Recommendations

In view of repeated tripping of various lines from Motihari 400/132KV(DMTCL) substation and unreliable operation of the protection system, an audit team was formed by MS, ERPC during the 67th PCC meeting for auditing the protection system of 400/ 132 KV Motihari and 400/220 KV Dharbhanga substation of DMTCL. Members of the above Protection Audit team were:

1) Sh. J. Ganeswara Rao, EE, ERPC
2) P.P. Jena, AEE, ERPC
3) Sh. Chandan Kumar, Sr. Engineer, ERLDC
4) Sh. Saibal Ghosh, Engineer, ERLDC
5) Sh. Vivek Pushphakar, Manager, NTPC Barh
6) Sh. Mohsin Raza, Manager, POWERGRID

Protection Audit team visited the 400/132 KV Motihari Substation on 11/06/18 and inspected all the settings and relay test reports in presence of DMTCL executives and matter of concerns and protection standard violation along with operational issues were flagged to them for taking the corrective action. A brief summary of findings of the audit team at 400/132 KV Motihari S/S is as below:

1) **Wiring issues:** In Disturbance Recorder, the wrong status of CB opening was noticed which was also highlighted during the tripping report by ERLDC. Along with this for Zone 1 fault, the pickup for zone 2 and zone 3 is not being observed. The above indicates wrong connection and the same was informed to DMTCL protection team for a thorough check for all the disturbance reorders available in the substation.
2) **Non-operation of Pole Discrepancy relay:** Pole Discrepancy relay for Gorakhpur -2 line has not operated properly, so its time setting and wiring need to be checked. Similar activity has to be done for all the 400 kV as well as 132 kV lines.
3) **Distance protection issue:**
    a. For some line, distance setting for all the zones was found to be incorrect and further, the Main 1 and Main 2 relays were found to having different settings for the same line. In one of the Main protection, (7SA522) for 400 kV lines, the carrier receipt is not configured in distance protection logic.
    b. Zone 2, Zone 3 and zone 4 time delay settings are to be reviewed as per the ERPC protection philosophy.
    c. **P.O.P Z2 scheme Usage:** P.O.P Z2 scheme has been used instead of Under reach scheme for the 400 kV lines.
    d. Reversal guard timer has been used which is not required.
    e. **Power swing block:** Blocking is used for all zones, but for the zone -1 it should be unblocked.
    f. **SOTF:** This was inactive in 7SA522 relay and DMTCL was asked to activate it.

400/132 kV Motihari(DMTCL) and 400/220 kVDarbhanga(DMTCL) Substation Auidt Findings and Recommendations

4) **Directional Earth Fault:** DT send for DEF protection have been activated however in practice utilities do not use a direct trip in case of DEF
5) **Disturbance Recorder timing:** DR timing was found to be 1.5 sec, which is quite less and does not capture the entire event in one DR file. DMTCL was intimated to make it 5 sec (0.5 s pre and 2,5post-fault) or higher as per the capability of Disturbance recorder file.
6) **Coordination of Overcurrent Protection of 400/132 kV ICTs:** The 400/132 kV ICT overcurrent protection need proper coordination with respect to the downstream 132 kV network in order to avoid any unwanted tripping due to a downstream network fault. Presently 400/132 kV ICTs are set to trip at 110% of rated current. However, the overcurrent tripping of the ICT needs to be set as per the overload alarm and overcurrent tripping also need to be reviewed with respect to the capacity of the ICTs.
7) **Station Operating Procedure during Blackout:** The details of action required to be done during any substation level blackout were found to be not available in the Control Room to assist the operator under emergency. This document is quite necessary in order to help and guide operator under such situation.
8) **Spares Management for GIS Substation:** As the 400 kV Gorakhpur-Motihari 2 Inter-regional circuit is on prolonged outage due to the issue of unavailability of spare at the Motihari substation. The Audit team is of the view that adequate spare need to be maintained at GIS substation to meet such contingency.
9) **Training of the Manpower:** It was observed that the shift personnel need adequate training for real-time operation of the GIS substation and the same has been informed to the DMTCL.
10) **Switchyard maintenance:** Lot of vegetation in the yard was found. So proper anti-weed treatment in regular interval need to be carried out.

The Audit team has also visited the 400/220 kV Darbhanga substation on 12/06/18 and the issues observed in the Motihari Substation were also found in Darbhanga substation.

Recommendations of Protection Audit Team for 400/132 kV Motihari and 400/220 kV Darbhanga Substation:

In view of the above issues, the Protection Audit Team informed DMTCL operation and protection team to for the smooth operation of both the 400 kV substations

1. Thoroughly check all the soft logic, setting and wiring connection for ensuring protection reliability of this important inter-regional corridor.
2. Adequate spare management to meet contingency
3. Training of control room operator for GIS substation operation
4. System Operating procedure availability in control room
5. Ensuring the protection coordination with the downstream network

Checklist for Submission of new transmission elements for updation in Protection Database

NAME OF ORGANISATION:
FOR THE MONTH OF:

SUBSTATION DETAIL:

Sl No	DETAILS OF ELEMENTS	DATA TYPE	Status of Submission (Y/N)	Remarks
1	TRANSMISSION LINE	LINE LENGTH, CONDUCTOR TYPE, VOLTAGE GRADE		
2	POWER TRANSFORMER	NAMEPLATE DETAILS		
3	GENERATOR	TECHNICAL PARAMETERS		
4	CURRENT TRANSFORMER	NAMEPLATE DETAILS		
5	VOLTAGE TRANSFORMER	NAMEPLATE DETAILS		
6	RELAY DATA	MAKE, MODEL and FEEDER NAME		
7	RELAY SETTINGS	NUMERICAL RELAYS: CSV or XML file extracted from Relay ELECTROMECHANICAL RELAYS: SNAPSHOT of RELAY		
8	REACTOR	NAMEPLATE DETAILS		
9	CAPACITOR	NAMEPLATE DETAILS		
9	UPDATED SLD			

SIGNATURE:
NAME OF REPRESENTATIVE:
DESIGNATION:
CONTACT:
E-MAIL ID:

C.E., CRITL

Visit report of 220kV Hatia- II to PTPS feeder of Hatia- II GSS on dated 04.07.18 :-

Following observation and works were done on 220kV Hatia- II to PTPS feeder -

1. **Over - voltage setting :-** Over- voltage setting of 220kV Hatia- II to PTPS feeder reviewed and found in order. Feeders Main and Back-up relay setting and DR are collected.
2. **VT fuse** :- With help of T&C, Ranchi team wiring circuit of VT is checked and found normal and VT fuse of 10A fuse is placed instead of 5A fuse by T&C team.
3. **Double grounding of CVT :-** Grounding of CVT is checked and only one ground is found in VT junction box which is as per ERPC advice.
4. **Phase polarity of CVT :-** All the polarity of CVT is checked and found normal. Y- phase CVT terminal is found loose in CVT junction box which is rectified.

05/07/18
JEE/CRITL.

05/07/18
JEE/CRITL

05/07/18
AGM/CRITL

Loose connection may be the reason of VT fuse failure, relay tripping because it is like open blowing of fuse.

5/7/18

CTR - 60/1.

Relay Make/Model		**MICOM P442**
LINE DETAILS		
SS Name		**Lalmatia**
Line Nom voltage	**KV**	**132**
Protected Line		**Lal to Kha BSEB**
Line Type		**Panther**
No of circuits		**1**
Line Length	**Km**	**60**
Positive sequence Reactance, X1	ohm/phase/km	0.38611584
Positive sequence Resistance, R1	ohm/phase/km	0.16222
Zero sequence Reactance, X0	ohm/phase/km	1.6221744
Zero sequence Resistance, R0	ohm/phase/km	0.41
ZPL Prot. Line Impedance	ohms	25.12846559
ZPL Prot. Line angle	Deg	67.21144057
Adjacent Shortest Line		
Line Type		**Panther**
Line Length	**Km**	**6**
Positive sequence Reactance, X1	ohm/phase/km	0.38611584
Positive sequence Resistance, R1	ohm/phase/km	0.16222
Zero sequence Reactance, X0	ohm/phase/km	1.6221744
Zero sequence Resistance, R0	ohm/phase/km	0.41
ZASL Adj. Short Line Impedance	ohms	2.512846559
Adj. Short Line Angle	Deg	67.21144057
Adjacent Longest Line		
Line Type		**Panther**
Line Length	**Km**	**63.5**
Positive sequence Reactance, X1	ohm/phase/km	0.38611584
Positive sequence Resistance, R1	ohm/phase/km	0.16222
Zero sequence Reactance, X0	ohm/phase/km	1.6221744
Zero sequence Resistance, R0	ohm/phase/km	0.41
ZALL Adj. Long Line Impedance	ohms	26.59429275
Adj. Long Line Angle	Deg	67.21144057
Adjacent SubstationTransformer details		
Voltage Rating	kV	132
MVA Rating	MVA	70
No of Transformers running in parallel	No.	2
Impedance	PU	0.125
Equivalent Impeancde		15.557
CT AND VT RATIOS		
Phase CT Primary	A	600.000
Phase CT Secondary	A	1.000
Main VT Primary	kV	132.000
Main VT Secondary	V	110.000
Parameters		
CTR/PT Ratio		0.50
Zone1	% of PL	80
Zone2	% of PL	120
	% of ASL	0
Zone3	% of PL	120.00
	% of ALL	120.00
Zone 4	% of PL (Rev)	20
Reverse line	km	-
Load power factor	cos theta	0.85
Vmin	pu	0.9
Imax	pu	931.66
Zload Primary	ohms	66.26
Zload Secondary	ohms	33.13
MVA of line		213

Rph	ohms	
RG	ohms	
Zone-1 Impedance	ohms	20.10277247
Zone-1 Line Resistance		7.78643712
Zone- 2 Impedance	ohms	30.15415871
Zone-2 Line Resistance		11.67965568
Zone- 3 Impedance	ohms	62.06731001
Zone-3 Line Resistance		24.04062461
Zone- 4 Impedance	ohms	5.025693119
Zone-4 Line Resistance		1.94660928
Pos Seq Imp		0.16221744+0.38611584i
Zero Seq Imp		0.40563072+1.6221744i
kZ0 Res. Comp		1.00
kZ0 Angle	Deg	11.65
Arc Resistance	ohms	2.080842414

CONFIGURATION FILE			
CONFIGURATION	**Units**	**EXISTING SETTINGS**	**PRDC Setting**
GROUP 1 Line Setting			
Line Length	km	46.6	60
Line Impedance	ohm	19.42	**12.56**
Line Angle:	deg	68.4	**67.21**
Setting Group		Select via Menu	Select via Menu
Active Settings		Group 1	Group 1
Setting Group 1	Enabled/Disabled	Enabled	Enabled
Dist. Protection	Enabled/Disabled	Enabled	Enabled
Power-Swing	Enabled/Disabled	Enabled	Enabled
Back-up I>	Enabled/Disabled	Enabled	Disabled
Neg Sequence O/C:	Enabled/Disabled	Disabled	Disabled
Broken Conductor	Enabled/Disabled	Enabled	Disabled
Earth Fault PROT	Enabled/Disabled	Earth Fault O/C	Earth Fault O/C
Aided D.E.F:	Enabled/Disabled	Disabled	Disabled
CB Fail & I<:	Enabled/Disabled	Enabled	Disabled
Thermal Overload:	Enabled/Disabled	Disabled	Disabled
Residual O/V NVD:	Enabled/Disabled	Disabled	Disabled
Internal A/R:	Enabled/Disabled	Enabled	Disabled
Volt Protection	Enabled/Disabled	Enabled	Disabled
Power System Data			
CT Starpoint			Towards Line
Rated Primary Voltage	kV	132.000	132.000
Rated Secondary Voltage (Ph-Ph)	V	110.000	110.000
CT Rated Primary Current	A	600.000	600.000
CT Rated Secondary Current	A	1.000	1.000
MComp CT Primary	A	-	
MComp CT Sec'y	A	-	
ZONE 1			
kZ1 Res Comp		0.8	**1.00**
kZ1 Angle	degree	0	**11.65**
Z1	ohm	7.76	10.05
R1Ph	ohm	10.00	**12.72**
R1G	ohm	10.00	18.85
tZ1	s	0s	0.00
ZONE 2			
KZ2 Res Comp		0.8	**1.00**
kZ2 Angle	degree	0	**11.65**
Z2	ohm	11.65	15.08
R2Ph	ohm	10.00	**15.90**
R2G	ohm	10.00	23.56

tZ2	s	0.3	**0.35**
ZONE 3			
KZ3 Res Comp		0.8	**1.00**
kZ3 Angle	degree	0	**11.65**
Z3	ohm	14.50	**31.03**
R3Ph-R4ph	ohm	10.00	**19.88**
R3G-R4G	ohm	10.00	**29.45**
tZ3	s	1	**1.00**
ZONE 4			
KZ4 Res Comp		0.8	**1.00**
kZ4 Angle	degree	0	**11.65**
Z4	ohm	1.94	**2.51**
tZ4	s	0.35	**0.50**
POWER SWING			
Delta R	Ohm	5.08	**5.89**
Delta X	Ohm	5.08	**5.89**
IN> Status		Enabled	Enabled
IN> (%Imax)	%	40	40
IN2> Status		Enabled	Enabled
IN2> (%Imax)	%	30	30
Imax Line> Status		Enabled	Enabled
Imax Line>	A	3	3
Delta I Status		Enabled	Enabled
Unblocking Delay		2	
Blocking Zone		011111	**011110**
Out of Step		1	
Stable Swing		1	
Backup Over Current			
I>1 Function		DT	IEC S Inverse
I>1 Directional		Direction Fwd	Non Directional
I>1 Current Set	A	0.75	1.500
I>1 Time delay	S	1	1.5
I>1 TMS		1	-
I>2 Function		DT	Disabled
I>2 Directional		Non Directional	Non Directional
I>2 Current Set	A	2	-
I>2 Time delay	S	2	-
I>3 Function		Disabled	Disabled
I>4 Function		Disabled	Disabled

Relay Make/Model		**MICOM P442**
LINE DETAILS		
SS Name		**132**
Line Nom voltage	**KV**	
Protected Line		**Lal to KTPP**
Line Type		**Panther**
No of circuits		**1**
Line Length	**Km**	**47**
Positive sequence Reactance, X1	ohm/phase/km	0.38611584
Positive sequence Resistance, R1	ohm/phase/km	0.16222
Zero sequence Reactance, X0	ohm/phase/km	1.6221744
Zero sequence Resistance, R0	ohm/phase/km	0.41
ZPL Prot. Line Impedance	ohms	19.68396471
ZPL Prot. Line angle	Deg	67.21144057
Adjacent Shortest Line		
Line Type		**Panther**
Line Length	**Km**	**6**
Positive sequence Reactance, X1	ohm/phase/km	0.38611584
Positive sequence Resistance, R1	ohm/phase/km	0.16222
Zero sequence Reactance, X0	ohm/phase/km	1.6221744
Zero sequence Resistance, R0	ohm/phase/km	0.41
ZASL Adj. Short Line Impedance	ohms	2.512846559
Adj. Short Line Angle	Deg	67.21144057
Adjacent Longest Line		
Line Type		**Panther**
Line Length	**Km**	**25**
Positive sequence Reactance, X1	ohm/phase/km	0.38611584
Positive sequence Resistance, R1	ohm/phase/km	0.16222
Zero sequence Reactance, X0	ohm/phase/km	1.6221744
Zero sequence Resistance, R0	ohm/phase/km	0.41
ZALL Adj. Long Line Impedance	ohms	10.470194
Adj. Long Line Angle	Deg	67.21144057
Adjacent SubstationTransformer details		
Voltage Rating	kV	132
MVA Rating	MVA	200
No of Transformers running in parallel	No.	1
Impedance	PU	0.125
Equivalent Impeancde		10.890
CT AND VT RATIOS		
Phase CT Primary	A	600.000
Phase CT Secondary	A	1.000
Main VT Primary	kV	132.000
Main VT Secondary	V	110.000
Parameters		
CTR/PT Ratio		0.50
Zone1	% of PL	80
Zone2	% of PL	120
	% of ASL	0
Zone3	% of PL	120.00
	% of ALL	120.00
Zone 4	% of PL (Rev)	20
Reverse line	km	-
Load power factor	cos theta	0.85
Vmin	pu	0.9
Imax	pu	931.66
Zload Primary	ohms	66.26
Zload Secondary	ohms	33.13
MVA of line		213

Rph	ohms	
RG	ohms	
Zone-1 Impedance	ohms	15.74717177
Zone-1 Line Resistance		6.099375744
Zone- 2 Impedance	ohms	23.62075766
Zone-2 Line Resistance		9.149063616
Zone- 3 Impedance	ohms	36.18499045
Zone-3 Line Resistance		14.01558682
Zone- 4 Impedance	ohms	3.936792943
Zone-4 Line Resistance		1.524843936
Pos Seq Imp		0.16221744+0.38611584i
Zero Seq Imp		0.40563072+1.6221744i
kZ0 Res. Comp		1.00
kZ0 Angle	Deg	11.65
Arc Resistance	ohms	2.080842414

CONFIGURATION FILE			
CONFIGURATION	**Units**	**EXISTING SETTINGS**	**PRDC Setting**
GROUP 1 Line Setting			
Line Length	km	40.3	47
Line Impedance	ohm	16.79	**9.84**
Line Angle:	deg	68.4	**67.21**
Setting Group		Select via Menu	Select via Menu
Active Settings		Group 1	Group 1
Setting Group 1	Enabled/Disabled	Enabled	Enabled
Dist. Protection	Enabled/Disabled	Enabled	Enabled
Power-Swing	Enabled/Disabled	Enabled	Enabled
Back-up I>	Enabled/Disabled	Enabled	Disabled
Neg Sequence O/C:	Enabled/Disabled	Disabled	Disabled
Broken Conductor	Enabled/Disabled	Enabled	Disabled
Earth Fault PROT	Enabled/Disabled	Earth Fault O/C	Earth Fault O/C
Aided D.E.F:	Enabled/Disabled	Disabled	Disabled
CB Fail & I<:	Enabled/Disabled	Enabled	Disabled
Thermal Overload:	Enabled/Disabled	Disabled	Disabled
Residual O/V NVD:	Enabled/Disabled	Disabled	Disabled
Internal A/R:	Enabled/Disabled	Enabled	Disabled
Volt Protection	Enabled/Disabled	Enabled	Disabled
Power System Data			
CT Starpoint			Towards Line
Rated Primary Voltage	kV	132.000	132.000
Rated Secondary Voltage (Ph-Ph)	V	110.000	110.000
CT Rated Primary Current	A	600.000	600.000
CT Rated Secondary Current	A	1.000	1.000
MComp CT Primary	A	-	
MComp CT Sec'y	A	-	
ZONE 1			
kZ1 Res Comp		0.8	**1.00**
kZ1 Angle	degree	0	**11.65**
Z1	ohm	6.20	7.87
R1Ph	ohm	10.00	**12.72**
R1G	ohm	10.00	18.85
tZ1	s	0	0.00
ZONE 2			
KZ2 Res Comp		0.8	**1.00**
kZ2 Angle	degree	0	**11.65**
Z2	ohm	10.07	11.81
R2Ph	ohm	10.00	**15.90**
R2G	ohm	10.00	23.56
tZ2	s	0.3	**0.35**
ZONE 3			

KZ3 Res Comp		0.8	**1.00**
kZ3 Angle	degree	0	**11.65**
Z3	ohm	12.59	**18.09**
R3Ph-R4ph	ohm	10.00	**19.88**
R3G-R4G	ohm	10.00	**29.45**
tZ3	s	1	**1.00**
ZONE 4			
KZ4 Res Comp		0.8	**1.00**
kZ4 Angle	degree	0	**11.65**
Z4	ohm	1.68	**1.97**
tZ4	s	1.2	**0.50**
Backup Over Current			
I>1 Function		DT	
I>1 Directional		Direction Fwd	
I>1 Current Set	A	0.75	
I>1 Time delay	S	1	
I>1 TMS		1	
I>1 tReset	S		
I>2 Function		DT	
I>2 Directional		Non Directional	
I>2 Current Set	A	2	
I>2 Time delay	S	2	
I>1 tReset	S		
I>3 Function			
I>4 Function			