Minutes
of
77th PCC Meeting

Date: 10.04.2019
Eastern Regional Power Committee
14, Golf Club Road, Tollygunge
Kolkata: 700 033

EASTERN REGIONAL POWER COMMITTEE

MINUTES OF 77TH PROTECTION SUB-COMMITTEE MEETING HELD AT POWERGRID ER-II OFFICE, KOLKATA ON 26.03.2019 (TUESDAY) AT 11:00 HOURS

List of participants is enclosed at **Annexure-A.**

PART – A

ITEM NO. A.1: Confirmation of minutes of 76th Protection sub-Committee Meeting held on 14th February, 2019 at ERPC, Kolkata.

The minutes of 76th Protection Sub-Committee meeting held on 14.02.19 circulated vide letter dated 13.03.19.

Members may confirm the minutes of 76th PCC meeting.

Deliberation in the meeting

Members confirmed the minutes of 76th PCC minutes.

PART – B

ANALYSIS & DISCUSSION ON GRID INCIDENCES OCCURRED IN FEBRUARY, 2019

ITEM NO. B.1: Disturbance at 400 kV Koderma(DVC) S/s on 25.02.2019 at 21:32 Hrs.

At 21:32 hrs, 400 kV Biharshariff-Koderma-I & 400 kV Bokaro-Koderma I tripped from both ends along with 400 bus-I. It was reported that LBB protection operated for tie bay between ST-I & GT-I. Two running units also got tripped during the disturbance.

Generation loss: 900 MW

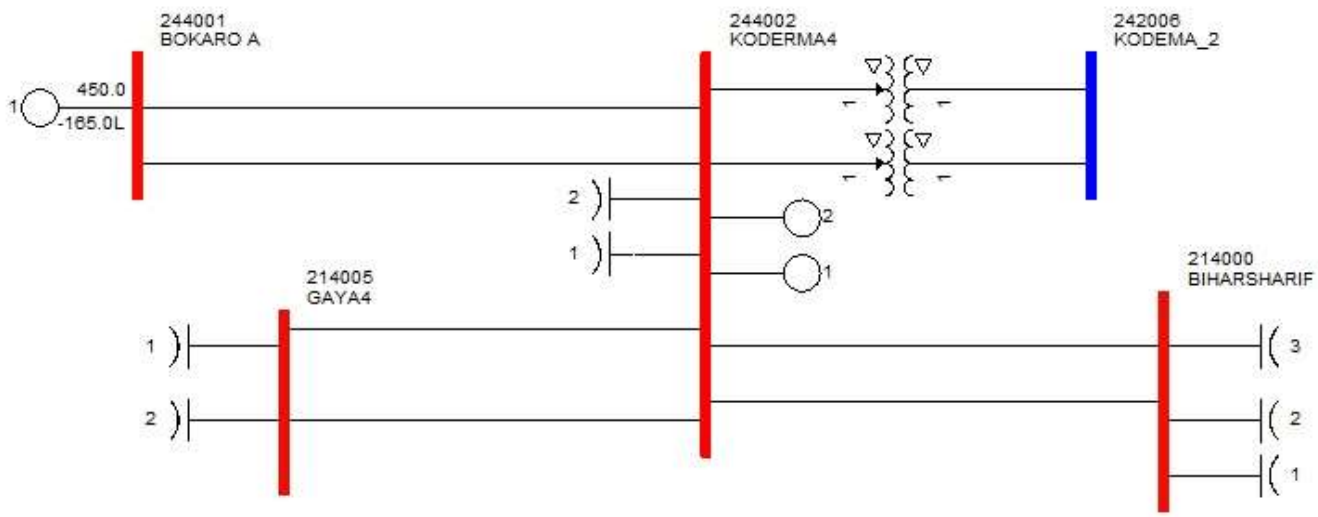

DVC may explain.

Deliberation in the meeting

DVC explained the disturbance with a detailed presentation. The presentation is attached in ***Annexure B1.***

DVC informed that the weather was stormy at the time of disturbance. They informed that 3 nos. of CTs got damaged during the incident which caused multiple trippings in the substation.

The damaged CTs were Y-Phase CT of GT#1-ST#1 tie bay, B-Phase Bus side CT of GT#2 and R-Phase Bus side CT of ST#2. The bottom side porcelain insulator of all the 3 CTs were found to be damaged. DVC added that earth resistance at the substation equipments had been checked and found within the limit.

PCC opined that the damage of porcelain insulators from bottom side of the CTs indicates that there could be improper structure earthing in the switchyard and advised DVC to carry out detailed earthing audit and insulation coordination of the switchyard.

Regarding tripping of the various elements during the disturbance, PCC found that all the trippings were in order except the tripping of tie breaker of bays 402, 414 & 420.

DVC explained that the at 21:32 hrs, busbar protection of main bus-I was operated due to failure of B-phase bus side CT of GT#2. As unit#2 kept on feeding the fault, the main LBB for GT#2 got operated. They added that along with LBB signal, the CBF trip signals were generated for all the tie breakers as a result the breakers of bays 402, 414 & 420 got tripped.

DVC informed that the LBB trip signal should be bay selective instead of bus selective in the Siemens relay. This resulted in tripping of tie breakers of bays 402, 414 & 420. DVC added that the issue of bus selective signal generation was referred to OEM.

ITEM NO. B.2: Disturbance at 400kV Meramundali(OPTCL) S/S on 26-02-19 at 17:50 hrs.

At 17:50 hrs, 400 kV bus I at Meramundali tripped due to LBB operation of tie breaker between 400 kV Meramundali - New Duburi - I and 400 kV Meramundali - Mendasal S/C resulting tripping of all elements from bus I at Meramundali. No effect in 220 kV bus as other ICT was in service.

Load Loss: Nil

OPTCL may explain.

Deliberation in the meeting

OPTCL explained the disturbance with a presentation. The presentation is attached in ***Annexure B2****.*

OPTCL informed that there was no electrical fault in the substation. The disturbance started at Meremundali after receiving DT signal from Mendasal end of 400kV Meramundali – Mendasal S/C line due to maloperation of PLCC.

On receipt of DT signal, the main breaker for 400kV Meramundali – Mendasal feeder tripped successfully whereas tripping of tie breaker was not successful as R-phase limb of the tie breaker did not open due to defective breaker plunger. Subsequently LBB relay operated for this feeder and tripped main breaker of 400 kV Meramundali-Duburi-2 which was in the same dia. At the

same time, all the feeders connected to 400 kV Bus-I got tripped due to busbar relay operation.

During analysis, OPTCL informed that both the bus side CT and tie CT inputs were taken for configuring the busbar protection relay which caused the maloperation of busbar differential relay and tripping of all the feeders connected to main bus-I.

PCC opined that only bus side CT should be considered for configuring the busbar differential relay and advised OPTCL to modify the busbar relay configuration.

Regarding PLCC issue, OPTCL informed that digital PLCC has been installed and it will be operational within 15 days after completion of the necessary tests.

ITEM NO. B.3: Disturbance at 400 kV Bakreswar S/S on 11-02-19 at 14:54 hrs.

400 kV bus II at Bakreswar tripped at 14:54 hrs due to Y-N fault at 400 kV Arambag - Bakreswar S/C. This results into tripping of 400/220 kV ICT - II along with GT of Unit#2. Unit#2 was on house load after tripping of GT-II.

As per PMU data, fault was cleared within 100 ms after tripping of line from both ends.

Load/Generation Loss: Nil

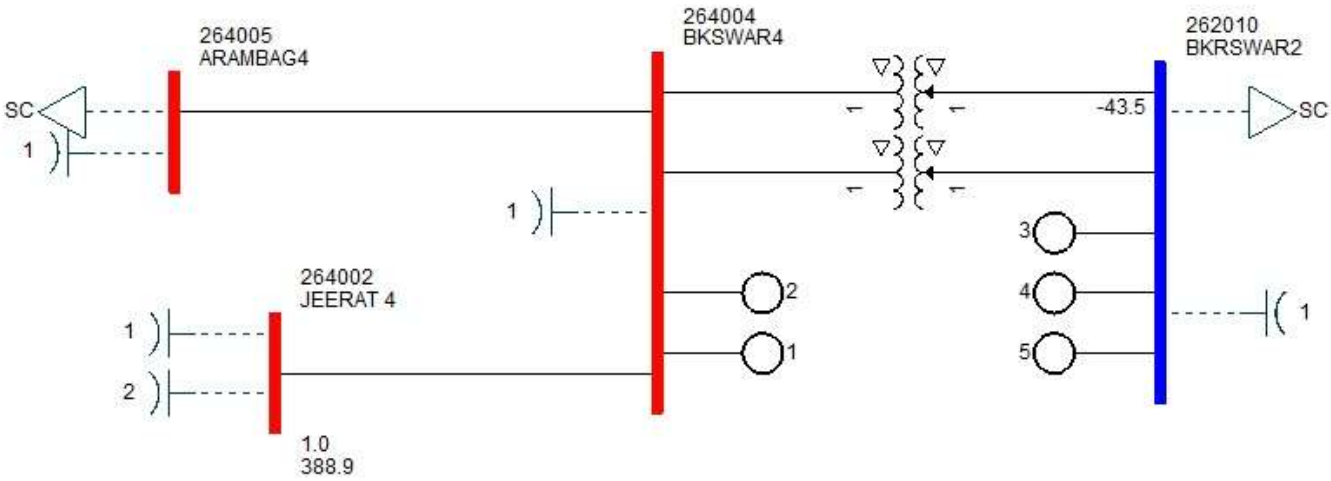

WBPDCL may explain.

Deliberation in the meeting

WBPDCL explained the disturbance with a presentation. The presentation is attached in ***Annexure-B3****.*

WBPDCL informed that there was an L-G fault in Y-phase of 400 kV Bakreswar – Arambag line. Relays of both the end have cleared the fault in zone-I of distance protection. At the same time, the LBB protection got activated at Bakreswar due to problem in Self reset tripping relay and tripped all the connected elements of 400 kV main bus-2. House load operation of Unit#2 was successful.

WBPDCL added that the defective self reset trip relay has been replaced and the LBB scheme was tested before putting in operation. The LBB scheme is old EM type and it would be replaced within a year under PSDF scheme.

WBPDCL informed that they are conducting the third party protection audit of their substations by M/s PRDC.

ITEM NO. B.4: Disturbance at 400/220 kV Sagardighi S/S on 03-02-19 at 18:43 hrs.

Due to B phase CT failure of Bus coupler Bay and actuation of Bus bar protection, 220 kV Sagardighi - New Sagardighi D/C tripped along with 400/220 kV ICT - I and unit I at Sagardighi.

Generation Loss: 300 MW

WBPDCL may explain.

Deliberation in the meeting

WBPDCL explained the disturbance with a presentation. The presentation is attached in ***Annexure-B4****.*

WBPDCL informed that the fault was due to the B-phase CT failure in 220 kV bus coupler bay. Since the CT falls under the common bus zone, busbar differential protection of both 220 kV main Buses got activated and tripped all the elements connected to the 220kV buses.

They informed that the damaged B-phase CT and adjacent Y-phase CT have been replaced with new CTs.

Regarding not receiving of the carrier signal at New Sagardighi S/s, PCC advised WBPDCL to review the settings in coordination with WBSETCL.

ITEM NO. B.5: Tripping Incidences in the month of February, 2019.

Other tripping incidences occurred in the month of February 2019 which needs explanation from constituents of either of the end is given in **Annexure-B5**.

In 36th TCC, all the constituents were advised to use the PDMS on-line portal for uploading the single line tripping details along with DR (comtrade files), EL and other relevant files for all trippings of August 2017 onwards. Otherwise, it will be considered as violation of compliance of clause 5.2(r) & 5.9 of IEGC.

In 74th PCC, all the constituents were requested to submit the disturbance report along with DR through the new version of on-line portal which was implemented from 01st Jan. 2019.

Members may discuss.

Deliberation in the meeting

Members explained the tripping incidences. Updated status is enclosed at ***Annexure-B5.***

PCC advised all the concern constituents to take necessary corrective actions to resolve the issues.

PART- C:: OTHER ITEMS

ITEM NO. C.1: Protection Audit and checking of relay settings in transmission system/distribution system within States.

CERC vide its order dated 26th March, 2018 in petition no. 09/SM/2015 directed RPCs to take up the issue of protection audit and relay settings in transmission system/distribution system within states.

In 75th & 76th PCC, all the states were advised to submit the present practice which is being followed to carry out protection audit and checking of relay settings in transmission system/distribution system within the states.

Members may update.

Deliberation in the meeting

DVC, OPTCL and West Bengal informed that healthiness of the protection system including the relay settings in the intrastate sub-transmission system/distribution system is being carried out once in a year during the annual maintenance.

PCC advised all the other constituents to submit their practice of carrying out protection audit and checking of relay settings in transmission system/distribution system to ERPC.

ITEM NO. C.2: FOLLOW-UP OF DECISIONS OF THE PREVIOUS PROTECTION SUB-COMMITTEE MEETING(S)

The decisions of previous PCC Meetings are given at Annexure-C2.

In 73rd PCC, it was observed that latest status on the implementation of the previous PCC recommendations were not updated by the constituents regularly. All the constituents were advised to update the latest status of the recommendations as per the list given in Annexure.

Members may update the latest status.

Deliberation in the meeting

*Updated status is enclosed at **Annexure-C2**.*

ITEM NO. C.3: Schedule of training program to be conducted by PRDC

PRDC, as per the AMC, is going to conduct 2nd training programme on PDMS and PSCT in state utility premises of Eastern Region. The tentative schedule is given below:

Sl no.	State	Location	Date	Training
1.	West Bengal	NJP	**04.02.2019-05.02.2019**	**on PDMS**
		Durgapur	**07.02.2019-08.02.2019**	
2.	Bihar	North Bihar	**08.04.2019-09.04.2019**	
		South Bihar	**11.04.2019-12.04.2019**	
3.	Sikkim	-	**03.06.2019-04.06.2019**	
4.	Odisha	-	**08.07.2019-09.07.2019**	
5.	Jharkhand	-	**05.08.2019-06.08.2019**	
6.	For All States	ERPC	**02.09.2019-06.09.2019**	**on PSCT**

Members may update.

Deliberation in the meeting

Members noted.

ITEM NO. C.4: Zone 3 settings of ISTS lines

Based on the data available in PDMS, the zone 3 settings of all ISTS lines in Eastern Region were verified and compared with the corresponding resistive reach of the line thermal loading. Zone 3 settings were also checked with the agreed protection philosophy of ER. The discrepancies observed in the settings will be presented in the meeting.

In 67th PCC, PRDC presented the list of ISTS lines where they observed the discrepancy in zone-3 setting.

In 73rd PCC, It was informed that Powergrid ER-I had verified the settings. Powergrid ER-II and Powergrid odisha will verify the settings at the earliest.

In 74th PCC, Powergrid & DVC informed that they will submit the details at the earliest.

DVC has submitted the zone settings data vide mail dated 16.01.19.

In 76th PCC, all the other transmission utilities are advised to submit the details at the earliest.

Members may update.

Deliberation in the meeting

It was informed that the zone 3 relay reach settings were compared with the thermal rating of the conductor and verified with the agreed protection philosophy. The updated settings received from the constituents are enclosed at ***Annexure-C4****.*

ITEM NO. C.5: Status of Third Party Protection Audit

The compliance status of 1st Third Party Protection Audit observations is as follows:

Name of Constituents	Total Observations	Complied	% of Compliance
Powergrid	54	46	85.19
NTPC	16	14	87.50
NHPC	1	1	100.00
DVC	40	26	65.00
WB	68	49	72.06
Odisha	59	42	71.19
JUSNL	34	25	73.53
BSPTCL	16	5	31.25
IPP (GMR, Sterlite and MPL)	5	5	100.00

** Pending observations of Powergrid are related to PLCC problems at other end.*

The substation wise status of compliance are available at ERPC website (Observations include PLCC rectification/activation which needs a comprehensive plan).

Members may note.

Deliberation in the meeting

BSPTCL has submitted the updated status.

ITEM NO. C.6: Non-commissioning of PLCC / OPGW and non-implementation of carrier aided tripping in 220kV and above lines.

According to CEA technical standard for construction of electric plants and electric lines -Clause 43(4) (c), transmission line of 220 KV and above should have single-phase auto-reclosing facility for improving the availability of the lines. However, from the tripping details attached June-August, 2016 it is evident that the some of 220kV above Inter & Intra-Regional lines do not having auto-reclose facility either at one end or at both ends. Out of these for some of the lines even PLCC/OPGW is not yet installed and carrier aided protection including Autorecloser facility is not yet implemented. Based on the trippings of June- August, 2016 and PMU analysis a list of such lines has been prepared and as given below:

List of line where auto reclose facility is not available(Information based on PMU data analysis)							
S. No	**Transmission Lines name**	**Date of Tripping**	**Reason of Tripping**	**Owner Detail**		**Present Status**	
				End-1	**End-2**	**OPGW/PLCC Link available**	**AR facility functional**
13	220KV BUDIPADAR-KORBA-II	23.06.16	Y-N FAULT	OPTCL	CSEB	PLCC available	will be activated in consultation with Korba
17	220 KV TSTPP-RENGALI	17.07.16	EARTH FAULT	NTPC	OPTCL		by March 2018
18	220KV BUDIPADAR-RAIGARH	21.07.16	EARTH FAULT	OPTCL	PGCIL	PLCC defective	
20	220 KV FARAKKA-LALMATIA	03.08.16	B-N FAULT .	NTPC	JUNSL	Yes	Old Relay and not functional. 7-8 months required for auto re-close relay procurement.
23	220 KV MUZAFFARPUR - HAZIPUR - II	10.08.16	B-N FAULT	PGCIL	BSPTCL		Voice established. For carrier required shutdown
24	220 KV ROURKELA - TARKERA-II	11.08.16	B-N FAULT	PGCIL	OPTCL	OPGW available	Expected to install protection coupler by Jan 17
27	220 KV BIHARSARIF-TENUGHAT	07.09.16	B-N FAULT	BSPTCL	TVNL		
33	220KV Jamshedpur-Jindal-SC						

34th TCC advised all the respective members to update the above list along with the last tripping status in next PCC meeting.

TCC further advised all the constituents to give the latest status of PLCC of other 220kV and above lines under respective control area.

OPTCL:

1. 220kV Rengali(PG)-Rengali S/Y (Proposal for Commn. in OPGW is pending): *PSDF appraisal committee accepted the proposal*
2. 220kV Indravati(PG)-Indravati(PH) (Proposal for Commn. in OPGW pending): *PSDF appraisal committee accepted the proposal*
3. 132kV Baripada(PG)-Baripada (Tendering in Progress for OPGW): *Contract awarded*
4. 132kV Baripada(PG)-Rairangpur (Tendering in Progress for OPGW): *Contract awarded*

BSPTCL:

Sl No.	***Lines***	***Status***
1	*220 kV Purnea(PG)-Madhepura*	*Protection through PLCC is working properly*
2	*220 kV Biharsharif-BTPS new*	*Commissioning of PLCC is under progress.*
3	*220 kV BTPS new- Begusarai*	*Commissioning of PLCC is under progress.*
4	*220 kV Biharshariff-Bodhgaya line LILO at Khizersarai*	*OPGW is present. Protection is done through DPC.*
5	*220kV MTPS-Motiari line*	*OPGW is installed.*
6	*220KV Madhepura-New Purnea D/C*	*Protection through PLCC is working properly*
7	*220KV Muzaffarpur-Hajipur D/C line*	*Protection through PLCC is working properly*
8	*220KV Patna-Khagaul-SC*	*PLCC Panel working properly.*

Members may update.

Deliberation in the meeting

PCC advised respective constituents to take the necessary action to implement PLCC.

ITEM NO. C.7: Disturbance monitoring equipment(DME) standardization

The power system is routinely subjected to faults or disturbances which can range from transient faults on transmission lines to system-wide disturbances involving multiple control areas, states and even countries. Investigation of each incident is critical in optimizing the performance of protection systems with the goal of preventing future incidents from becoming wide-area disturbances. The tools required to perform post-incident analyses include DME which can capture pre-event, event, and post-event conditions with a high degree of accuracy.

Recorders can be classified into two categories:

- FR (Fault Recorder)
- Sequence of events Recorder (SER)

For FR (Fault Recorder) following points may be standardized:

a. Deployment
b. Record Length
c. Triggers
d. Sampling Rates

For Sequence of events Recorder following points may be standardized:

a. SER Capability
b. Point Assignments
c. Use of RTUs for SER

Common issues:

a. Data format
b. Power Supply
c. Monitoring

Reference documents for this:

1. NERC Standard PRC-002-2 Disturbance Monitoring and Reporting Requirements
2. NPCC Regional Reliability Reference Directory # 11 Disturbance Monitoring Equipment Criteria

In 74th PCC, all the constituents were advised to submit their comments/observations relating to the draft standard.

PCC also decided similar kind of standard would be prepared for Transformer Protection and Busbar Protection.

In 75th PCC, PRDC presented the draft standard for Transformer Protection and Busbar Protection.

In 76th PCC, all the members were advised to submit their comments to ERLDC and ERPC at the earliest.

Members may update.

Deliberation in the meeting

*The updated draft standard is attached at **Annexure-C7**. PCC advised all the constituents to submit their comments to ERLDC and ERPC by next PCC meeting.*

ITEM NO. C.8: Additional Agenda

1. Tripping of 400 kV New Ranchi-Patratu-II on 22.03.19 at 22:42 Hrs-ERLDC

During the anti theft charging of 400 kV New Ranchi-Patratu-II line, the line tripped on B-N fault with 140 kV voltage dip at New Ranchi at 22:31 hrs. At 22:42 hrs, the line was charged again without any intimation to ERLDC control room. During this second attempt the line tripped again on same B-N fault with 160 kV voltage dip at New Ranchi.

Both the time MPL has reported heavy jerk in their running units.

Powergrid may explain.

Deliberation in the meeting

Powergrid informed that they would look into the issue.

****

Annexure - A

Participants in 77th PCC Meeting

Venue: PGCIL Conference Hall, Kolkata Time: 11:00 hrs Date: 25.03.2019 (Tuesday)

Sl No	Name	Designation/ Organization	Contact Number	Email	Signature
1	S. KEJRIWAL	SE, ERPC	9831919509	shyam.kejriwal@gov.in	[signature]
2					
3	Surajit Banerjee	GM, ERLDC	9433041823	surajit.banerjee@posoco.in	[signature]
4	SK Pramanik	CGM Powergrid	7603037367	skpramanik@powergridindia.com	[signature]
5	Chandan Kumar	DM, ERLDC	9869251460	chandan@posoco.in	चंदन कुमार
6	Ashoke Kumar Basak	DM, ERLDC	9007059569	akbasak@posoco.in	[signature]
7	PREETOSH GHOSH	EE, SLDC, DVC	9674299618	preetosh.ghosh@dvc.gov.in	P. Ghosh
8	Ansuman Roy	Tech-V BS, NHPC	8170057738	ansuman1975@gmail.com	[signature]
9	S.K. Das.	SM(E), NHPC, Co.	9717786721	Sdas_nhpc@yahoo.co.in	[signature]
10	S. K. MISHRA	DGM (OS) NTPC, ER-II HQ	9438233207	skmishra05@ntpc.co.in	[signature]
11	H.P. Mahapatra	Sr. G.M, OHPC	7328840015	hpm.ohpc@gmail.com	[signature]
12	Manoj Kumar Das	G.M (EL) SLDC OPTCL, Bhubaneswar	9438907603	ele.mkdas@optcl.co.in	[signature]
13	S.S. Nanda	DGM E&M Medium OPTCL, Burla	9438907803	ele.ssnanda@optcl.co.in	[signature] 26/3/19
14	Rajesh Kumar	AM, TUL	7479044380	radhesh1415@gmail.com	[signature]
15	Chiranjib Bhowmik	DGM (E&I) HEL	9163321587	chiranjib.bhowmik@rp-sg.in	[signature]
16	P. Ghosh	Manager (AM)	9434748283	Partha.ghosh@powergridindia.com	[signature]
17	Rinchen Zangmo	Sr. Engineer, BPC, Bhutan	9547996504	rinchenzangmo1@bpc.bt	Rzangmo
18	Tshering Choden	Engineer BPC, Bhutan	7870807563	tsheringc8@gmail.com	[signature]
19	Vibha Singh	JEE, CRITL BSPTCL	7033298253	vibhabsptcl@gmail.com	[signature]
20	ALKA RANI	AEE, CRITL BSPTCL	7992459501	alkarani1349@gmail.com	Alka

"Coming together is a beginning, staying together is progress, and working together is success." –Henry Ford

Participants in 77th PCC Meeting

Venue: PGCIL Conference Hall, Kolkata Time: 11:00 hrs Date: 25.03.2019 (Tuesday)

Sl No	Name	Designation/ Organization	Contact Number	Email	Signature
21	S.S. Mavadi	JUSNL	6202991413	cecritl.jusnl@rediffmail.com	
22	S.K. SAHU	DGM/PGCIL	9078883643	skSahu@powergridindia.com	
23	S. A. ANSARI	MGR/PGCIL	9431820252	shabbirahamadansari@powergridindia.com	
24	S.K. HAZRA	Sr GM/Pankaj Mgr	9433041809	skhazra@powergridindia.com	
25	JAYANTA KANJILAL	Addl. CE	9434910189	JAYANTA-KANJILAL@WBSETCL.IN	
26	SUDIPTA GHOSH	Mgr. (PS) WBPDCL	8336917005	sghosh4@wbpdcl.co.in	
27	B. SARKHEL	Consultant ERPC	9433065724	buddha.sarkhel@yahoo.co.in	
28	P.P. Jena	AEE, ERPC	9776198491	ppjena.erpc@gov.in	
29	Rupam Das	JE, PRDC	7278885852	rupam.das@prdeinfotech.com	
30	SUPROTIM SEN	Mgr, WBPDCL	9830158767	suprotim.sen@gmail.com	
31	GAUTAM NAYAK	Addl. CE.	9434910544	gautam.nayak@wbsetcl.in	25/3/19
32	Saibal Ghosh	Asst. Manager	8584072079	saibal@posoco.in	Saibal Ghosh
33	RAJ PROTIM	Dy. Mgr.	9903339191	rajprotim@posoco.in	
34	KAUSTUV BOSE	Jr. Engr. POWER GRID	8420008676	kaustuvbose@powergridindia.com	26/03/19
35	Sukdev Bal	Ch. Mgr. POWERGRID	9903180042	sukdevbal@powergridindia.com	
36	J. G. Rao	EE, ERPC	9547891353	erpcprotection@gmail.com	
37					
38					
39					
40					

"Coming together is a beginning, staying together is progress, and working together is success." –Henry Ford

Annexure-B1

SYSTEM DISTURBANCE AT KTPS ON 25.02.2019

BRIEF HISTORY

- At around 21:32hrs of 25/02/19 KTPS 400KV Main Bus # 1 failed along with tripping of GT # 2, ST # 2, ICT # 2 and BS # 2, BTPS A # 1 lines.
- On switchyard inspection the bottom porcelain insulators of Y-Phase CT of GT#1-ST#1 tie, B-Phase Bus side CT of GT#2 and R-Phase Bus side CT of ST#2 were found damaged. Gaya 1 Y-Phase CT was found partially damaged.
- The weather conditions during the occurrence was stormy and raining heavily with lightning and thunder.

KTPS 400 KV SYSTEM

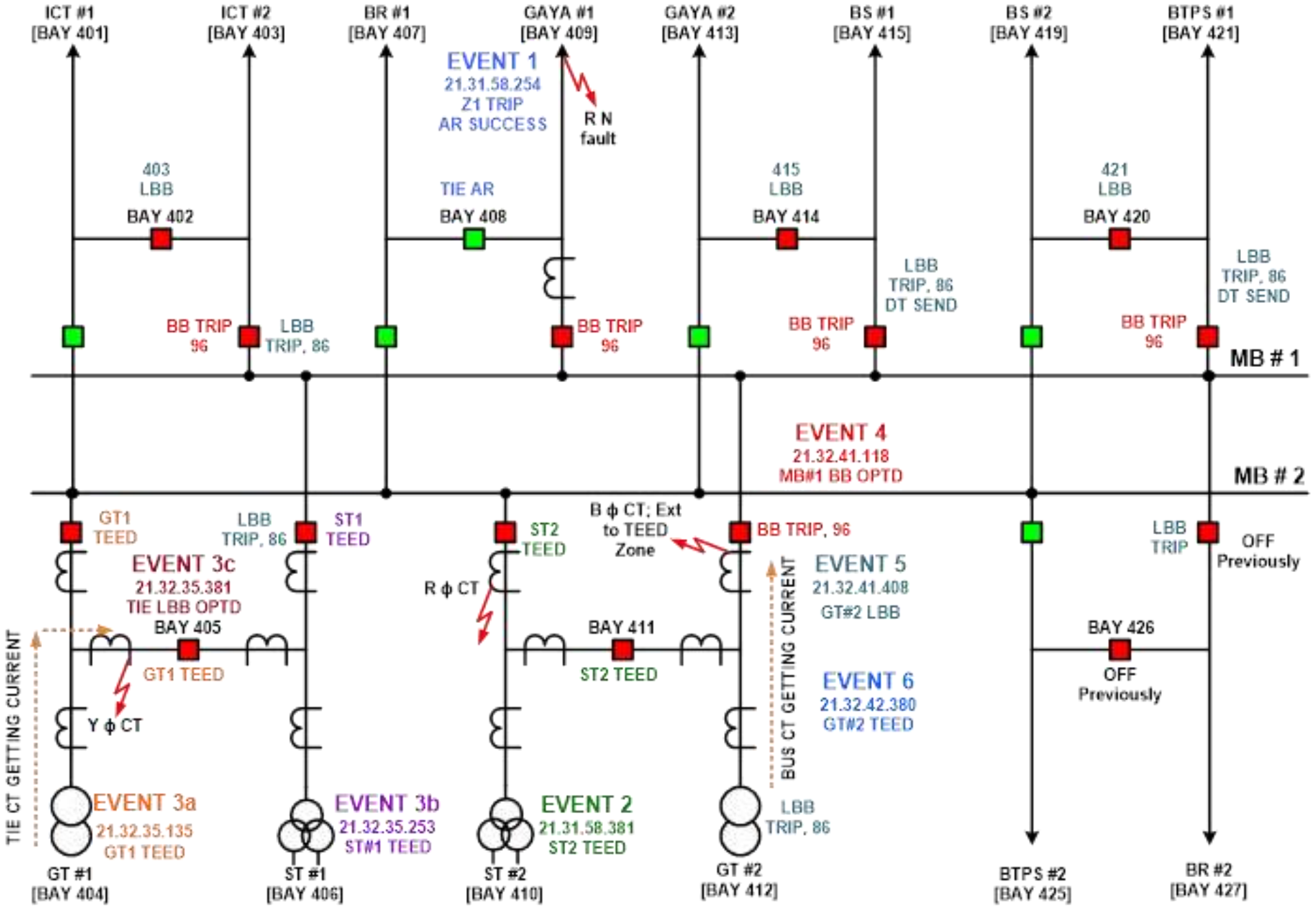

Sl. No.	Bay Name	Event Time	Relay Indications	Description of Event
1	Gaya 1	21:31:58.254	C-N; Zone 1	Transient fault in Zone 1; 409 & 408 opens
2	ST 2	21:31:58.381	87 Teed Y ϕ	ST 2 Main CT fault; 410 & 411 opens
3	Gaya 1	21:31:59.586	AR Optd	Main & Tie AR Optd ; 409 & 408 closes
4	GT 1	21:32:35.135	87 Teed Y ϕ, Class A	GT 1 Tie CT fault; 404 & 405 opens
5	ST 1	21:32:35.253	87 Teed Y ϕ	Probably from same fault. 406 opens
6	GT1 ST1 Tie	21:32:35.381	Tie LBB Optd	Generator feeding GT ST Tie CT fault.
7	BB CU	21:32:41.118	MB1 BB optd, Bϕ	Fault in B Phase on MB1 or bus side of GT2 B ϕ CT
8	All MB1 bays	21:32:41.124 to 21:32:41.139		96 Optd; 409, 421, 406, 415, 412, 403 opens
9	GT#2	21:32:41.193	Class-C Trip	
10	GT#2	21:32:41.217	Class-A Trip	
11	GT#2	21:32:41.401	GT2 LBB Optd	
12	BS1, ICT2, BTPS1, BR2	21:32:41.425-21:32:41.432	86.1, 86.2 optd	420, 402, 414 trips. BS1, BTPS1 DT send. 426 already OFF
13	GT#2	21:32:42.380	87 Teed Y ϕ	87 TEED optd due to fault in Y Ph CT in zone.

EVENT ANALYSIS

- **Event # 1: 21:31:58:254** →Transient Z1 R-N fault in Gaya Line #1 → Successfully cleared → successfully reclosed too.
- **Event # 2: 21:31:58.381** → Fault on R-Phase CT on the bus-side of ST#2 bay → 87T (R Phase) operates for ST#2 → ST#2 Main CB and Tie CB trip.
- **Event # 3a: 21:32:35.135** → Fault on GT1 side Y-Phase Tie CT → 87T optd → GT#1 Main & Tie CB tripped → Gen # 1 Class A trip.
- **Event # 3b:** Tie CB of GT # 1 trip → Generator # 1 kept feeding the fault → 87T for ST#1 operates at **21:32:35.253** → the location of this fault falls under the Teed differential region for ST#1 →ST # 1 Main CB (Bay 406) CB opens.

- **Event # 3c:** Fault feeding to the Tie CT (which provides to Tie LBB protection) through Unit#1 continues → Tie LBB protection operates at **21:32:35.381** → no further tripping.
- **Event # 4: 21:32:41.118** → MB#1 BB operates due to fault in B-Phase Bus-Side CT of GT#2 → all MB1 96 relays operates → All Main CBs of MB1 trip.
- **Event # 5:** Gen # 2 kept on feeding the fault → GT # 2 Main LBB optd.
- During this operation that Tie CBs of bays 414, 402 & 420 opened due to operation of 415, 403 & 421 bay 86 relays.
- **Event # 6: 21:32:42.380** → Another fault within GT # 2 TEED zone in Y Phase → 87T of GT # 2 optd as fault was being fed by Unit # 2. In DR the Y phase contribution is seen from GT side only.

Opening of TIE CB of 414/402/420

- No trip signal in any protection relay for these 3 ties. Yet all 3 Main Bay 86.1 & 86.2 had operated.
- Observation: At the same instant of GT # 2 LBB PU of all bays connected to MB1 shows appearance of signal ‘CBF Trip L123’.
- Apprehension: Signal is bus selective and not bay selective.
- Manual says signal is bus selective.
- Confirmation: A 6 bay PUs received this signal with the same time stamp. The ties which were not already tripped / out of service tripped.

REASON FOR CT DAMAGE

- All the damaged CTs had similar evidence of damage i.e. the last porcelain disc was found totally ruptured and the 2-3 porcelain disc upper to it was partially damaged.
- Also all 3 CTs had burnt marks on the shorting link between insulator flange and the tank flange of CT.
- This suggests passing of electric discharge through this shorting link which is suggestive of lightning surges discharging through CT insulation

TESTS DONE

- All CT Tan Delta tests done. All were O.K.
- GT2, ST2, GT 1 Tie CT replaced as precautionary measure considering extent of damage.
- All LA tested for 3rd Harmonic leakage current. Only BTPS 1 R & Y Phase and Gaya 2 B Phase LA 3rd Harmonic leakage current found above 500µA limit. Defective LAs replaced.
- Earth Resistance of GT 2 & ST2 CT risers checked and found to be 0.01 Ω.
- Substation Earth Mat Earth Resistance tested and found O.K.
- CVT grounding checked and found O.K.
- All LM tower earth resistances found to be within 0.01-0.02Ω.

REMEDIAL ACTIONS

- M/S Siemens shall be contacted to recheck the Bus Bar Protection CU & PU settings and provide expert opinion about how to solve the problem of Tie CB tripping of all bays during Main CB LBB condition of any one bay on the bus.
- Complete substation Earthing Audit to be done

CT DAMAGES

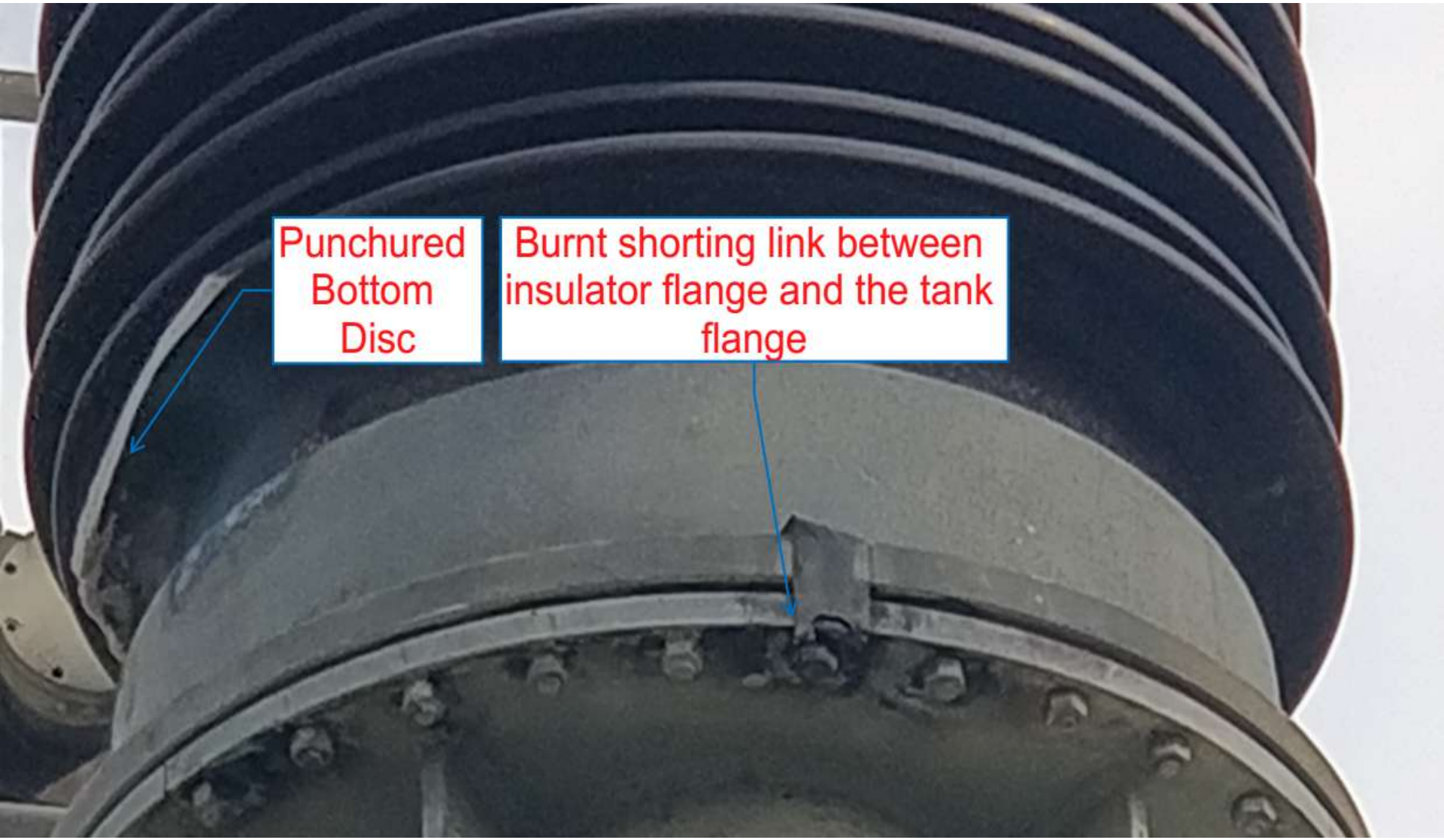
Punchured Bottom Disc
Burnt shorting link between insulator flange and the tank flange

CT DAMAGES

GREATER
DAMAGE

GT ST#1 TIE LBB: 21:32:35.381

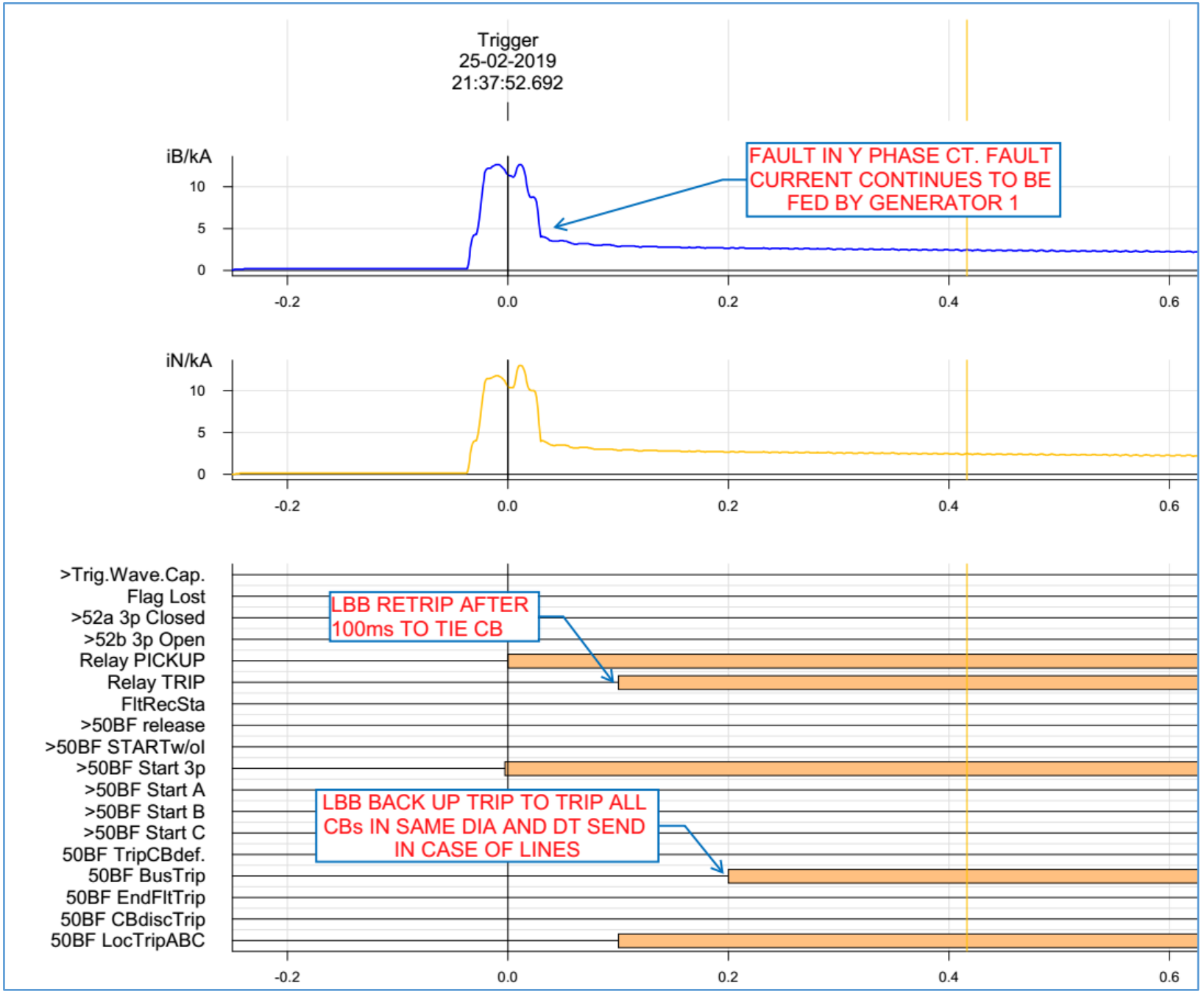

GT # 2 LBB: 21:2:41:408

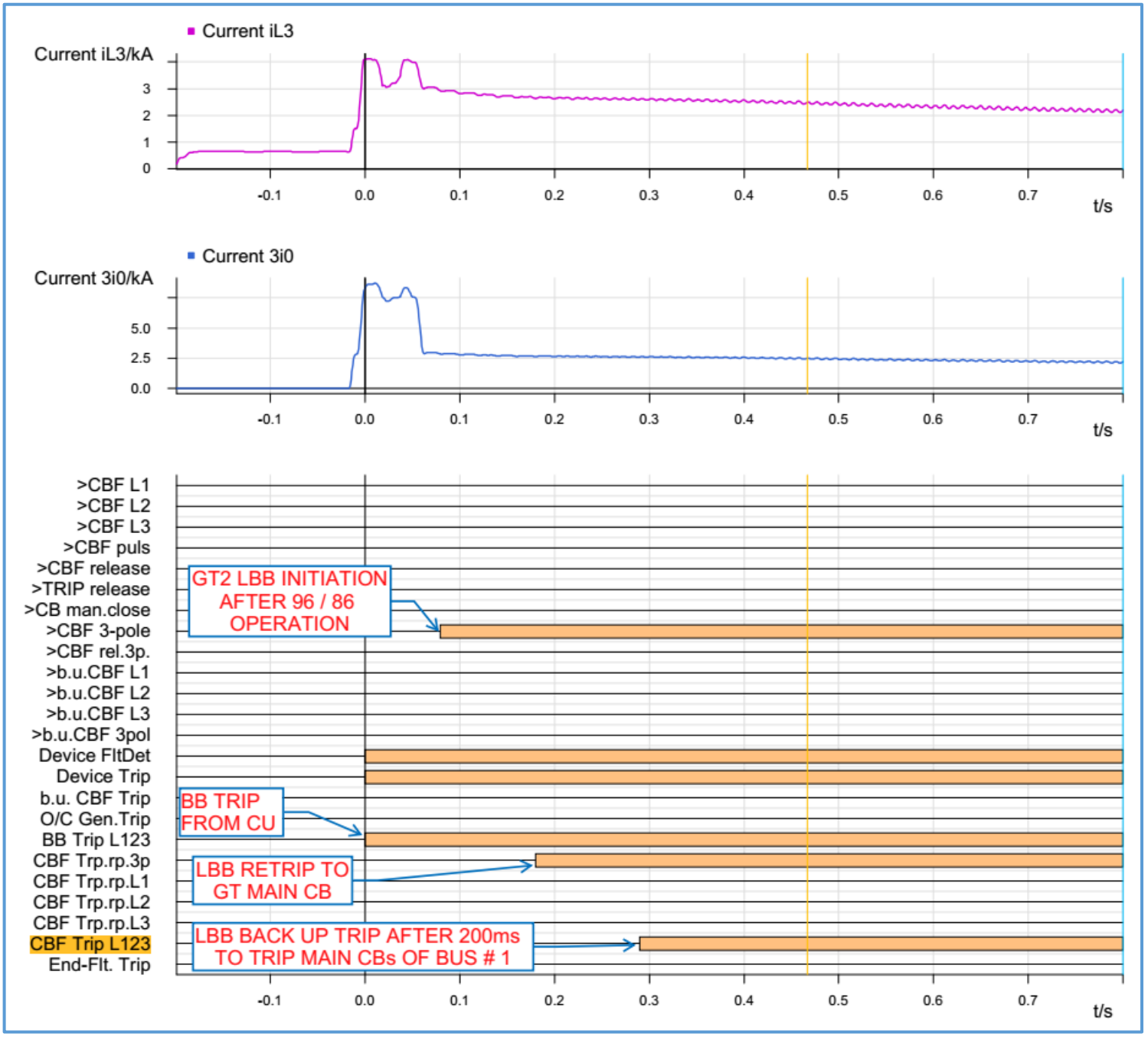

DR OF OFF BIHARSHARIFF # 1

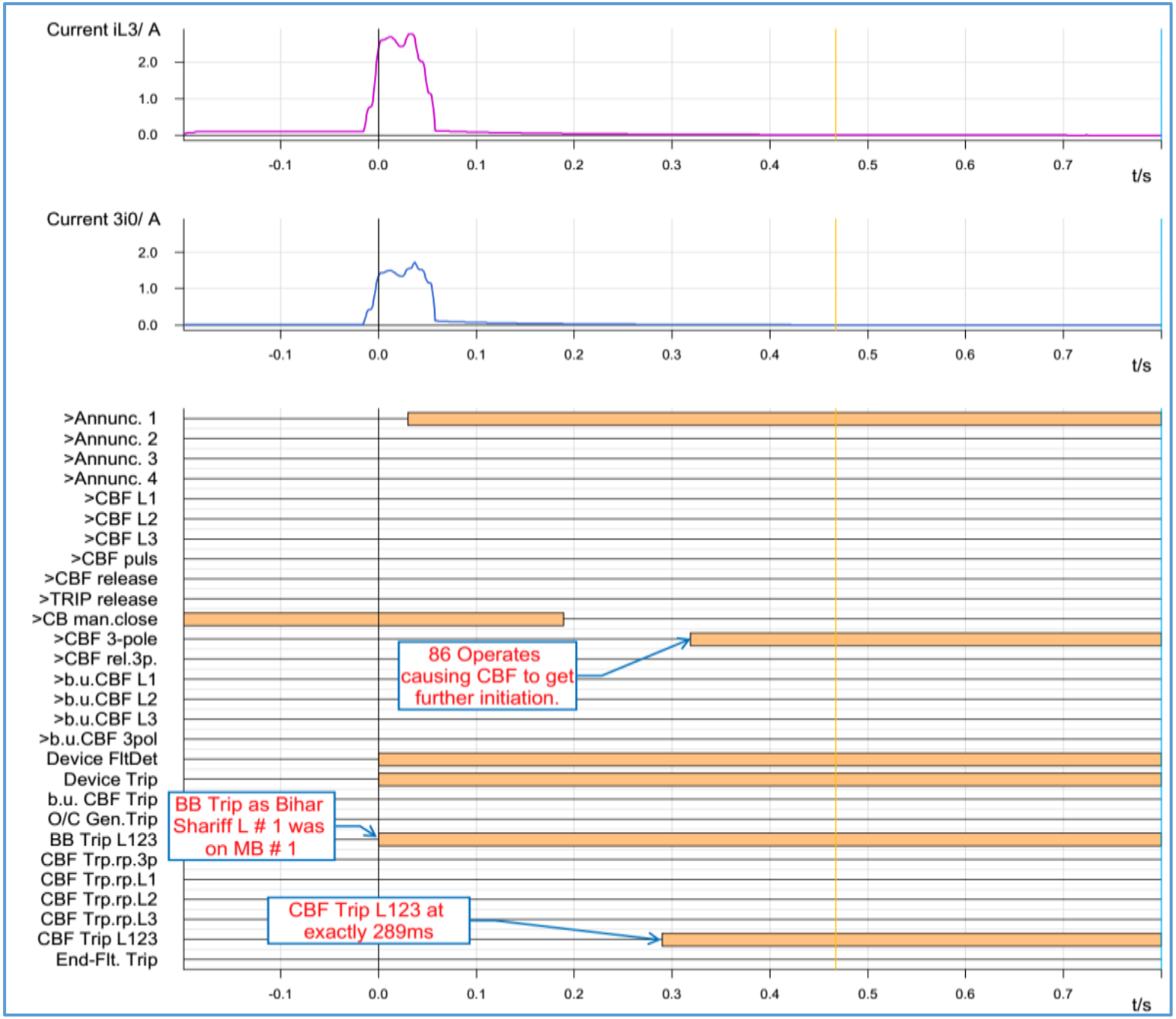

BUS REACTOR # 2 WAS OFF

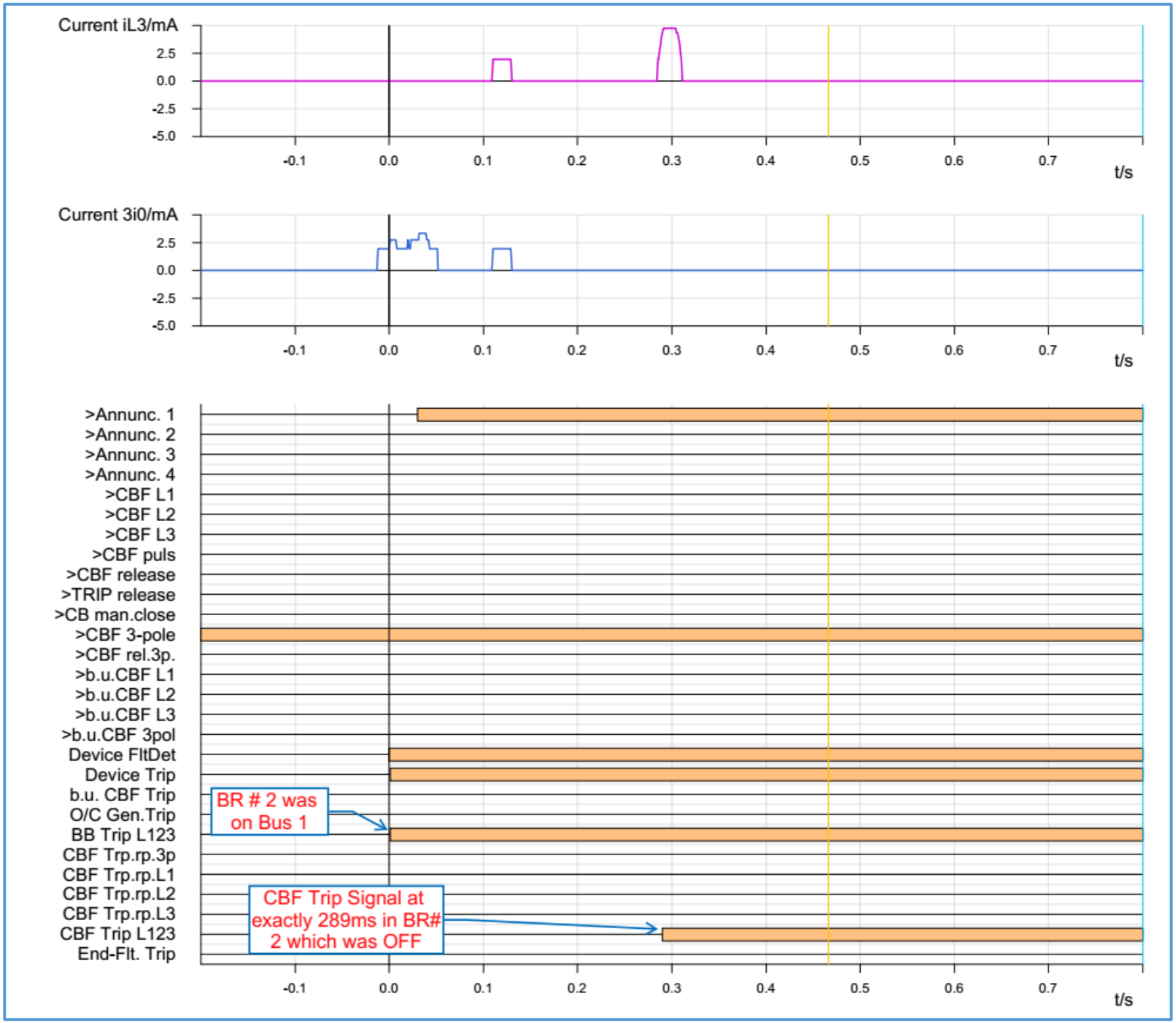

Annexure-B2

Disturbance of 400KV Bus-1 at 400KV Meramundali on 26.02.19 at 17.25hrs

- At 17.25Hrs. the 400kV Bus-I became dead due to tripping of MRDL-Mendhasal-1 on DTT receive signal from Mendhasal end.
- Tie LBB relay (96T) and 86 relay operated for Dia-402 feeder but didn't trip due to mechanical problem in tie breaker R-Ph limb.
- LBB relay (96L) and 86 relay also operated for Duburi-1 & ICT- 1. LBB relay (96L) also operated Lapanga-2, GKEL,Angul-2 & JSPL-1 .
- LBB relay (96T) operated for 315 MVA ICT-II.

PRE- FAULT CONDITON AT MERAMUNDALI GRID ON 26.02.2019

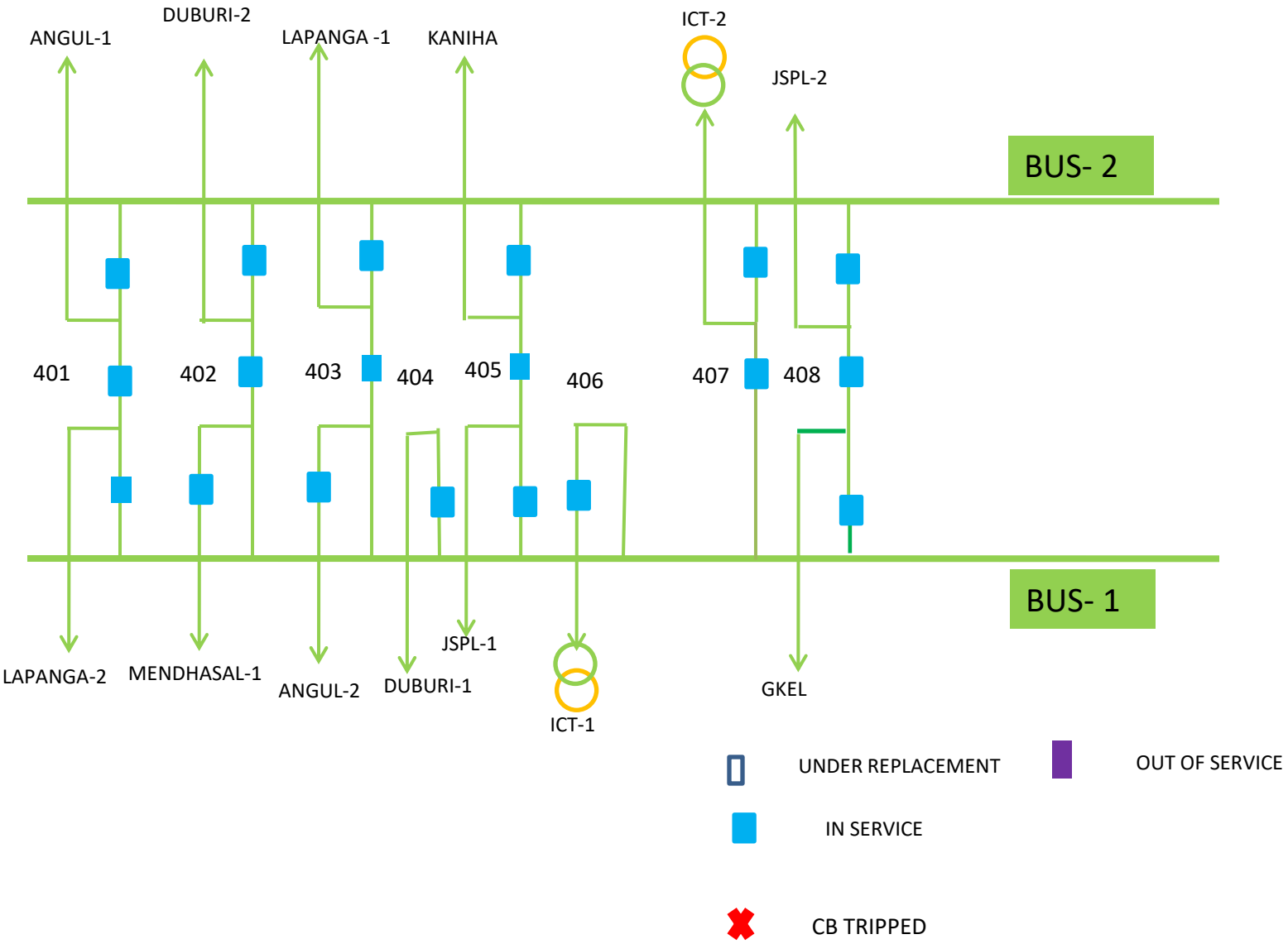

DURING DISTURBANCE IN MERAMUNDALI GRID ON 26.02.2019

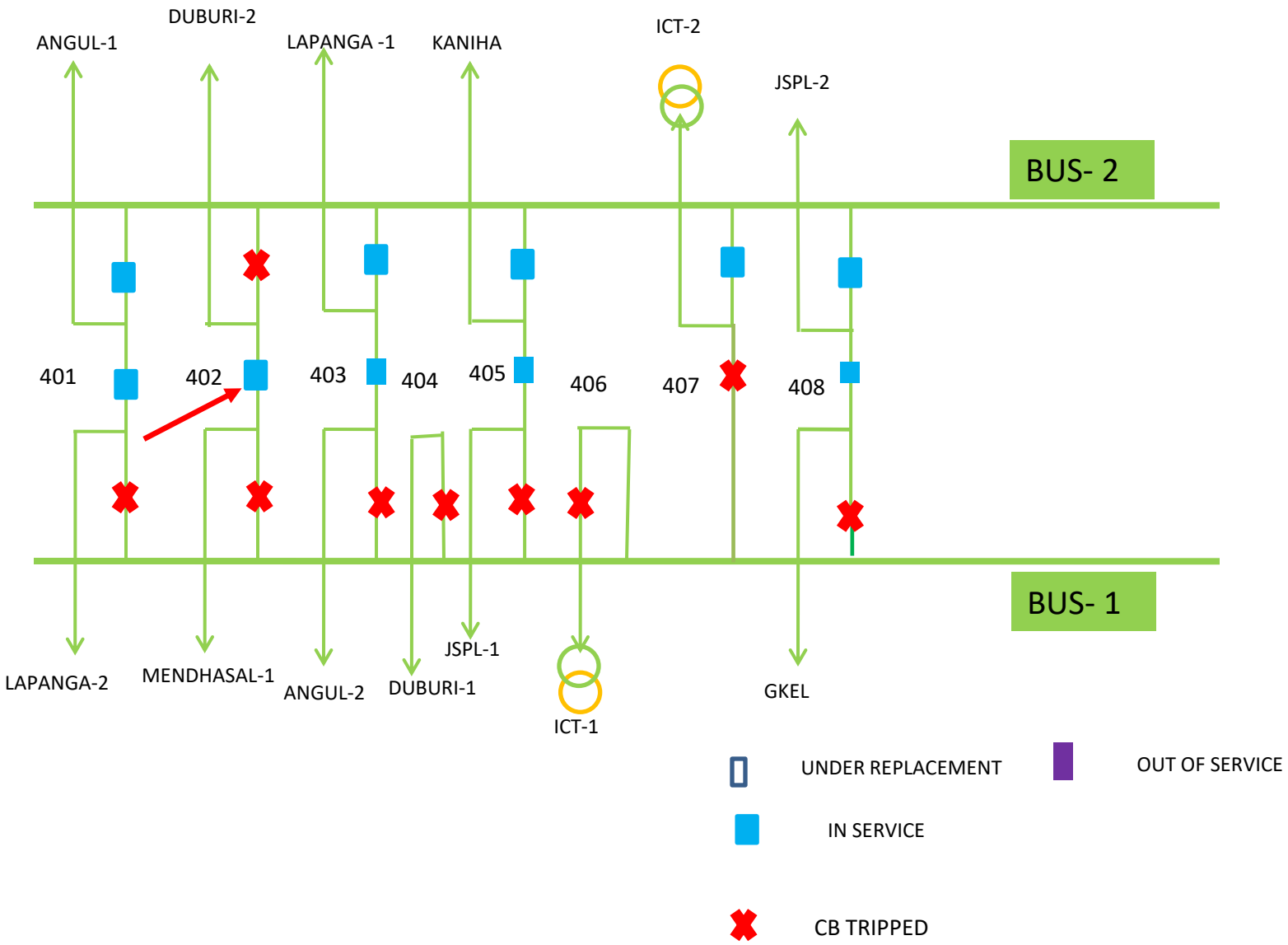

Date & Time of Occurrence:26.02.2019, 17.25 Hrs

Details of Occurrence:

Sl.No.	Name of feeder	Relay Indication	
		Meramundali End	Remote End
1	400 kV Mendhasal-1	DTT Receive 86 Optd.	No Trip
2	400 kV Duburi-1	LBB Relay(96L) 86 Optd.	
3	315MVA ICT-1	LBB Relay(96L) 86 Optd.	DT Receive. 86 Optd.
4	400 kV Duburi-2	Tie LBB Relay(96T) 86 Optd.	
5	400KV Lapanga-2 400KV GKES 400KV Angul-2 400KV JSPL-1	LBB Relay(96L)	
6	315MVA ICT-2	Tie LBB Relay(96T)	

DEFECTIVE R-Φ BREAKER LIMB

DEFECTIVE PLUNGER:

DEFECTIVE BREAKER LIMB PLUNGER

Analysis:-

At 17.25Hrs. 400KV Meramundali-Mendhasal-1 feeder (Main breaker) tripped at Meramundali end on getting DT receive signal from Mendhasal end. But associated tie breaker of Dia-402 didn't trip due to mechanical problem in R-Ph limb of the breaker even if the operation of tie LBB relay which resulted tripping of Main breaker of Duburi-2.The other 400KV feeder breakers i.e Lapanga-2, GKEL,Angul-2 & JSPL-1 were also tripped on operation of Bus-1 main LBB relay as the continous R-Ph current was flowing from Mendhasal End. The 400KV Duburi-1 & 315MVA ICT-1 power supply interrupted as the tie breaker was not available but the 400KV Lapanga-2, GKEL,Angul-2 & JSPL-1 were availing uninterrupted power supply through Tie breakers.

REMEDIAL MEASURES:

1. **The driving mechanism plunger of the 402-Tie breaker have been replaced & breaker taken in to service.**
2. **The up-gradation of carrier protection scheme through DTPC is on progress.**

Annexure-B3

PRESENTATION ON DISTURBANCES OF 400KV SWITCHYARD MAIN BUS#2 ON 11/02/2019 DUE TO LBB RELAY OPERATION AT 400KV ARAMBAG FEEDER OF BAKRESWAR THERMAL POWER STATION

400KV SLD

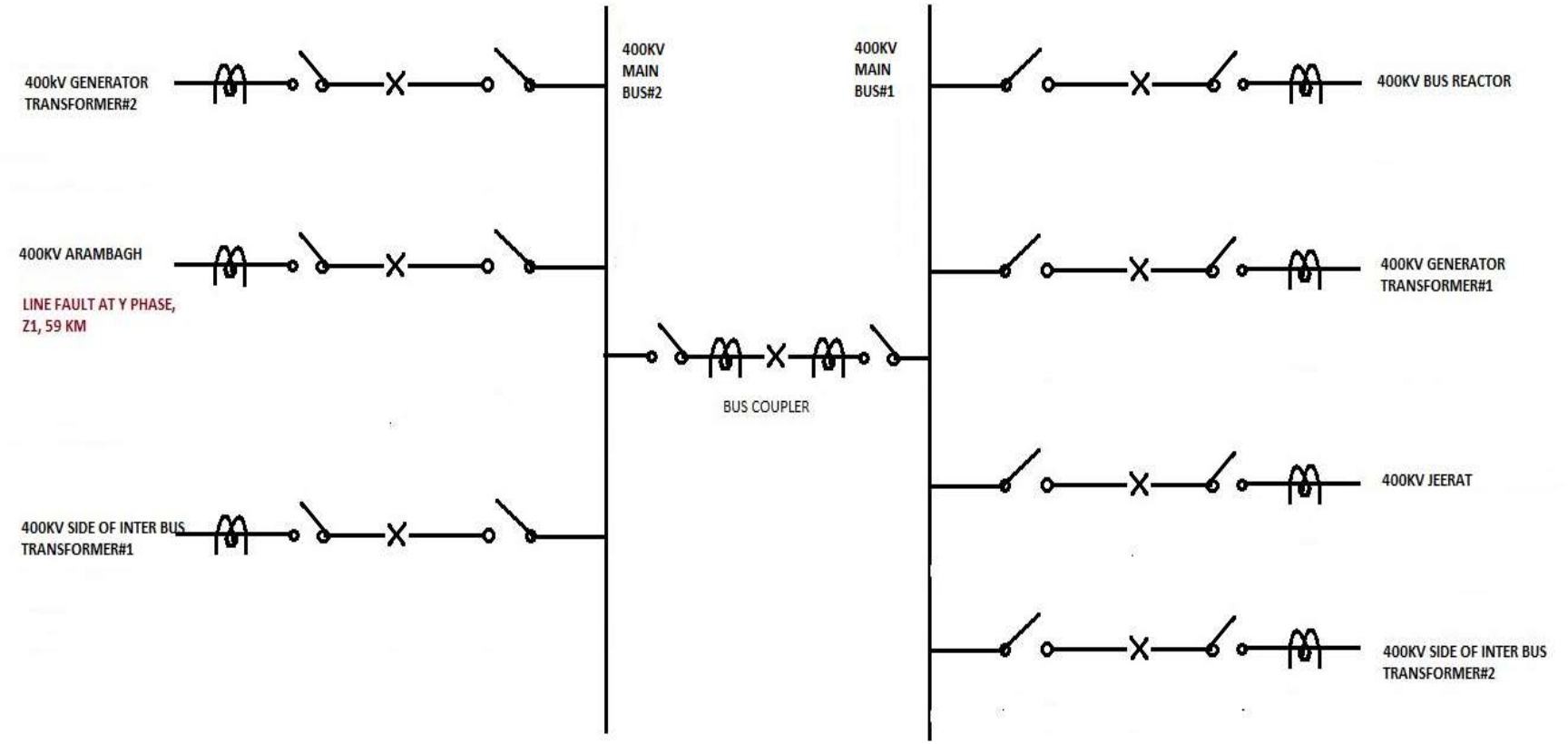
400kV GENERATOR TRANSFORMER#2
400KV ARAMBAGH
LINE FAULT AT Y PHASE, Z1, 59 KM
400KV SIDE OF INTER BUS TRANSFORMER#1
400KV MAIN BUS#2
400KV MAIN BUS#1
BUS COUPLER
400KV BUS REACTOR
400KV GENERATOR TRANSFORMER#1
400KV JEERAT
400KV SIDE OF INTER BUS TRANSFORMER#2

THESE FOLLOWING FEEDERS WERE IN 400KV MAIN BUS#2

- 400KV GENERTOR TRANSFORMER#2
- 400KV ARAMBAGH FEEDER
- 400KV INTER BUS TRANSFORMER#1

THESE FOLLOWING FEEDERS WERE IN 400KV MAIN BUS#1

- 400KV BUS REACTOR
- 400KV GENERTOR TRANSFORMER#1
- 400KV JEERAT FEEDER
- 400KV INTER BUS TRANSFORMER#2

RELAY OPERATION

- **AT Arambag feeder**
- **Relays**:-50Z,30/50Z, 2/50Z, 27/1, 130AY, 130BY, 86/1B, 86/2B, 96
- Main-1: MICOM(P-437) - TRIP, Z1 Opt, Carrier Received, Y Ph Trip. Dist - 39.3 km.
- Main-2: MICOM (P-442): Z1, B-N (Y-ph), fault current=4.35kA, Distance: 59.88 km, Fault duration:53.29 ms, Relay trip time:79.94 ms
- **AT GT#2:**
- ***Relays*** - 96, 27A,
- ***Annun***: B/B Proctection operated .
-
- **AT IBT# 1**
- ***Relays***:- 86A, 86B, 96 (At 400 kV side), 86(220kV side)
- ***Annun***:B/B Protection.

ANALYSIS OF TRIPPING

- Unit#2 was running at 152 MW load with mill group A,C,D,F. At that time , 400 KV Arambagh feeder , IBT-1, GT-2 were on Main BUS 2. At 14:54 hrs, 400kV MB#2 tripped due to operation of LBB Protection at Arambag feeder during line fault in Y phase at a distance 39 Km. Due to operation of LBB protection, Bus Bar protection relay(96) operated at 400kV side of IBT#1 and 400kV GT#2, since those two feeders were in 400KV MB#2. House load operation of Unit#2 was successful. M/C was synchronized with grid by 400 KV MB-1 at 15:13 hr.

Action Taken /Final observation of Testing as on 17.02.2019

- Self reset tripping relay (862B) model : VAJSM43SF116B of Main# 2 Distance protection with Auto reclose relay (P 442) of 400 KV Arambagh circuit found sluggish operation (sometimes it takes more than 180 ms , sometimes maximum 2 secs). As a result, LBB protection operated on 11.02.2019 at 14:57 hrs during Y – phase ground fault. 862B Relay replaced and actual Auto reclose operation checked. Relay operation checked at all 4 zones with and without carrier signal and found OK. Operation of Main#1 relay (P 437) is also found OK. 2/50Z timer for LBB is also checked and found 211 ms operation time on 17.02.2019.
- *Closing time* and *Tripping time* of Arambagh Feeder Breaker was checked and found OK.

Thank You

Annexure-B4

PRESENTATION ON DISTURBANCES OF 220KV SWITCHYARD ON 03/02/2019 DUE TO BURSTING OF 'Blue' PHASE CT OF 220KV Bus Coupler (Bus # 2 Side) AT SAGARDIGHI THERMAL POWER PROJECT

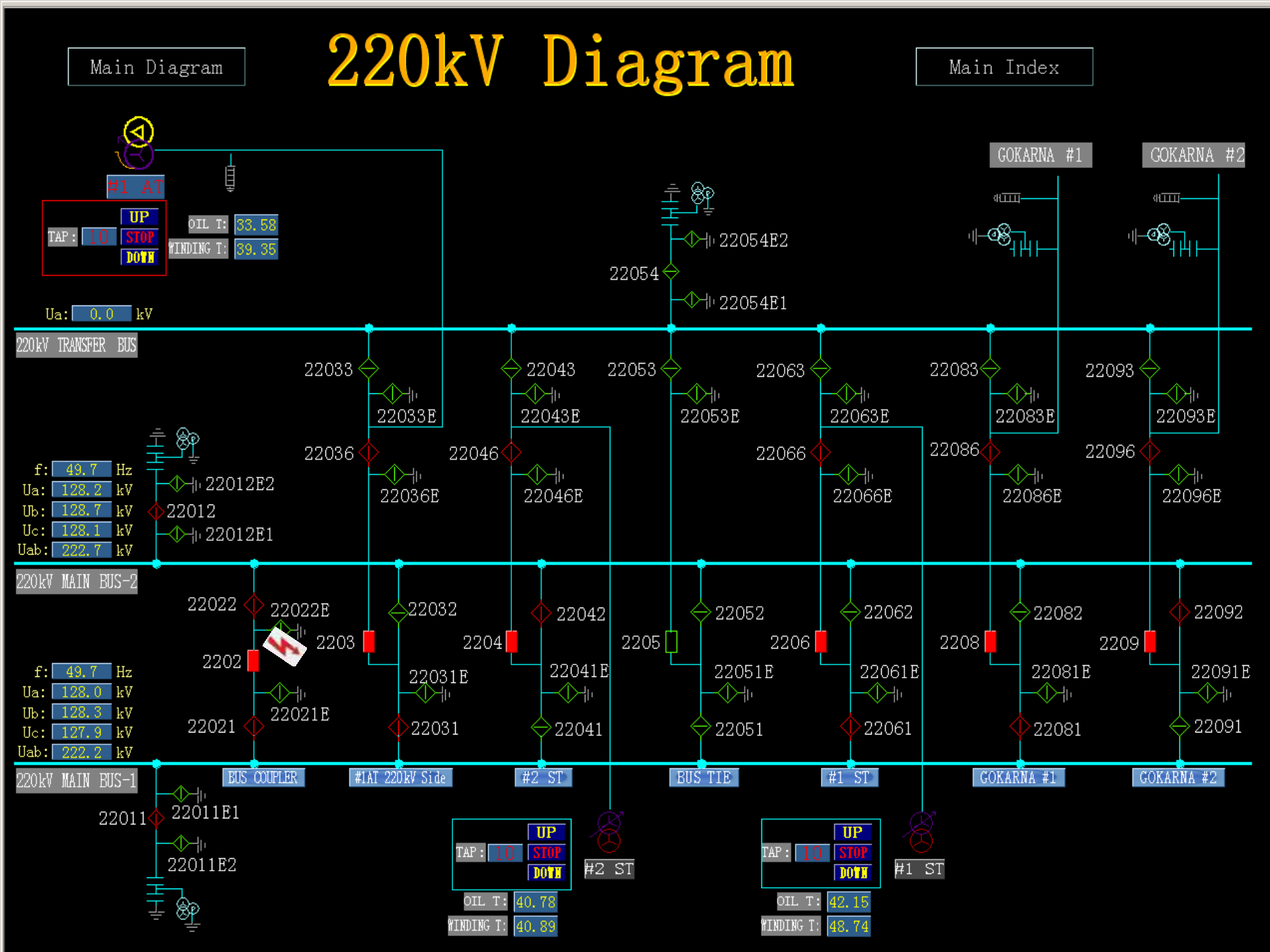
Main Diagram
220kV Diagram
Main Index
#1 AT
TAP : 10
UP
STOP
DOWN
OIL T: 33.58
WINDING T: 39.35
Ua: 0.0 kV
220kV TRANSFER BUS
22054E2
22054
22054E1
GOKARNA #1
GOKARNA #2
22033
22033E
22043
22043E
22053
22053E
22063
22063E
22083
22083E
22093
22093E
22036
22036E
22046
22046E
22066
22066E
22086
22086E
22096
22096E
f: 49.7 Hz
Ua: 128.2 kV
Ub: 128.7 kV
Uc: 128.1 kV
Uab: 222.7 kV
22012E2
22012
22012E1
220kV MAIN BUS-2
22022
22022E
2202
22021E
22021
2203
22032
22031E
22031
2204
22042
22041E
22041
2205
22052
22051E
22051
2206
22062
22061E
22061
2208
22082
22081E
22081
2209
22092
22091E
22091
f: 49.7 Hz
Ua: 128.0 kV
Ub: 128.3 kV
Uc: 127.9 kV
Uab: 222.2 kV
220kV MAIN BUS-1
BUS COUPLER
#1AT 220kV Side
#2 ST
BUS TIE
#1 ST
GOKARNA #1
GOKARNA #2
22011
22011E1
22011E2
TAP : 10
UP
STOP
DOWN
#2 ST
OIL T: 40.78
WINDING T: 40.89
TAP : 10
UP
STOP
DOWN
#1 ST
OIL T: 42.15
WINDING T: 48.74

FOLLOWING FEEDERS WERE IN 220KV MAIN BUS#1

- 220KV Station Transformer # 1
- 220KV New Sagardighi # 1
- 220KV ICT

FOLLOWING FEEDERS WERE IN 220KV MAIN BUS#2

- 220KV Station Transformer # 2
- 220KV New Sagardighi # 2

BUS Coupler breaker was ON.

SEQUENCE OF OPERATION

- RCS915 IA Bus Bar Protection relay operated at 18:43:34 with ‘C’ phase fault indication.
- 220 kV Bus Bar differential protection operated resulting tripping of Main Bus-1 & Main Bus-2.
- Main Bus-1: ST#1, New Sagardighi#1, ICT#1 and Bus Coupler.
- Main Bus-2: New Sagardighi#2, ST#2.

220 kV Busbar Relay Scheme

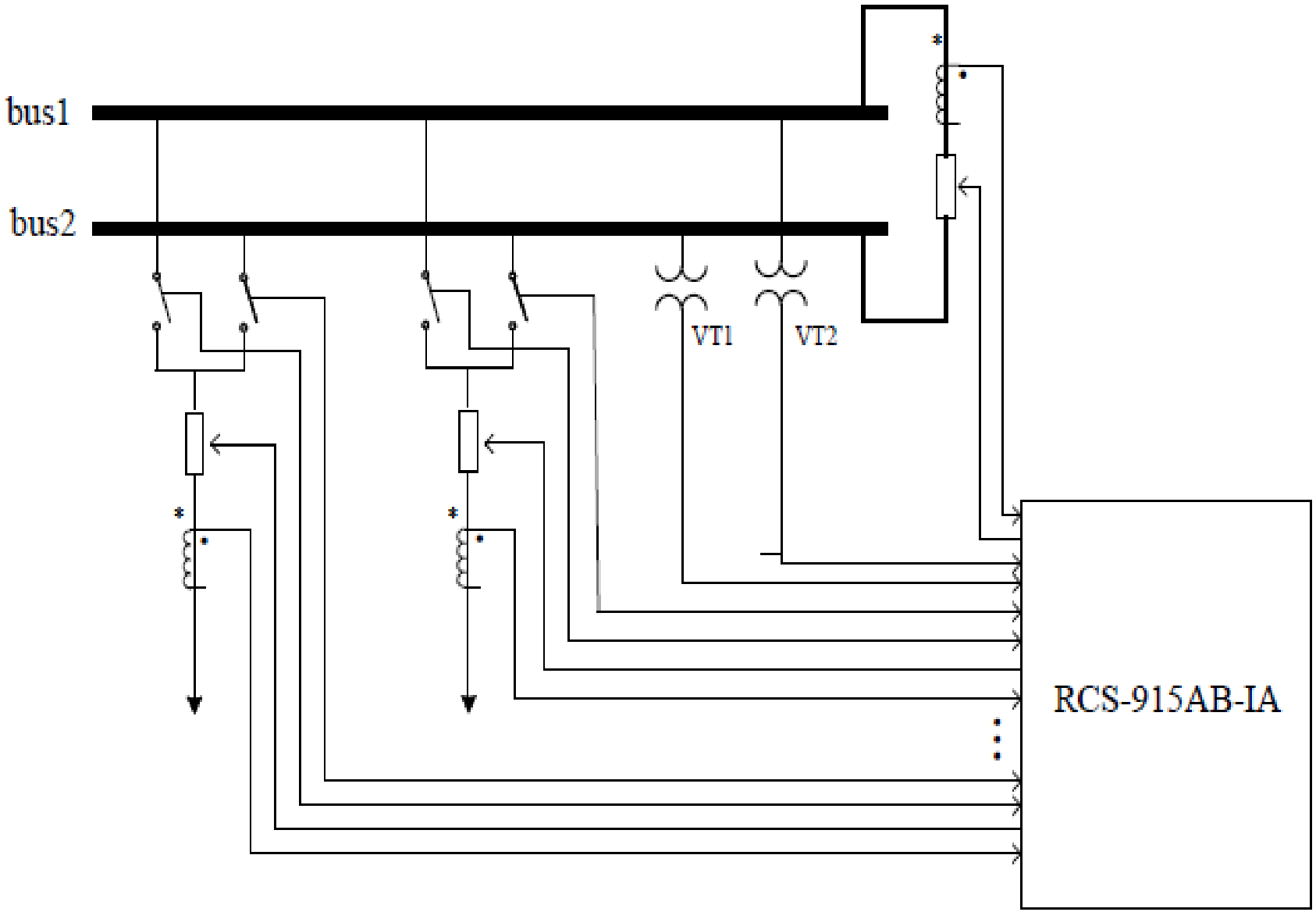

ANALYSIS OF TRIPPING

- Unit#1 was running at 172 MW load & Unit#2 in S/D condition. Bus Bar differential protection of 220 KV MB-1 &2 operated due to bursting of Blue-phase CT of 220kV Bus Coupler (CT insulator and bottom tank ruptured) and **thus both bus were dead.**

- After tripping of ST#2, Running Compressors B,E,F were from Reserve Bus got tripped due to no Reserve Power. As a result Instrument Air pressure rapidly fell from 18:44 Hrs. MS Temp rapidly decreased and Unit#1 tripped through MS Temp “Low Low (430° C)” at 19:00 Hrs.

- **220 kV Bus Coupler Bus#2 side** old CT (AREVA make) Tan delta values were found **0.60** (B-phase Sl no: 20060865/2006) & **0.23** (Y-phase, Sl no: 20060864/2006) respectively. Y-phase CT got affected due to bursting of adjacent CT(B-phase).
- **Both CTs were replaced by new spare CT** : Y-phase ALSTOM make (Sl no: 37994003272/2014) & B-phase ALSTOM make (Sl no: 37994004900/2014) on 05.02.2019.
- Before placing Y & B phase CT into its base, the necessary tests were done at switchyard and found OK . After placing the new CT at the structure, Polarity, CT resistance tests were done. **All the test values were found OK** . After testing, necessary connections (CT secondary wires & tan delta earthing point) were done properly. The circuit was charged on 09/02/2019.

Condition of Damaged CT of ‘Blue’ Phase

Condition of Damaged CT of ‘Yellow’ Phase

Thank
you

Annexure-B5

List of Intra Regional line tripping in the month of February 2019 where violation of protection standard has been observed

LINE NAME	TRIP DATE	TRIP TIME	RESTORATION DATE	RESTORATION TIME	Relay Indication LOCAL END	Relay Indication REMOTE END	Reason	Fault Clearance time in msec	Remarks	PCC Comments
Miscellaneous: High Fault clearing time, Tripping on DT, No Fault observed in PMU										
400KV MEERAMUNDALI-MENDHASAL-SC	04-02-2019	4:26	04-02-2019	5:01	--	DT RECEIVED AT MENDHASAL	DT RECEIVED AT MENDHASAL	--	No Fault observed in PMU	PLCC problem, rectified
400KV JEERAT-SAGARDIGHI-SC	07-02-2019	19:10	07-02-2019	19:18	MASTER TRIP AT JEERAT	NO TRIP AT SAGARDIGHI	MASTER TRIP AT JEERAT	--	No Fault observed in PMU	WBSETCL/WBPDCL to update
220KV DALKHOLA (WB)-DALKHOLA (PG)-I	09-02-2019	11:52	09-02-2019	21:44	--	CB AUTO TRIP	CB AUTO TRIP AT PG END	--	No Fault observed in PMU	CB contact issue at PG end, issue resolved
400KV NEW PPSP-NEW RANCHI-II	25-02-2019	11:17	25-02-2019	12:00	Did not trip	DT received	DT received at New Ranchi end		--	DT not sent from New PPSP
400KV FSTPP-KhSTPP-IV	26-02-2019	9:40	26-02-2019	9:58	DT received	--	DT RECEIVED AT FARAKKA	--	No Fault observed in PMU	NTPC to update
Autoreclose related issues										
220KV MUZAFFARPUR-KANTI-II	08-02-2019	12:24	08-02-2019	12:58	B-N, 5.51Km, 11.36Ka	--	B-N Fault	< 100 msec	No A/R operation found	PLCC at Kanti end need to be checked
220KV GAYA-SONENAGAR-II	08-02-2019	23:08	09-02-2019	0:05	A/R successful , R-N , 33.7 KM, 1.53 KA	Tripped at Sonenagar end	R-N Fault	< 100 msec	No A/R operation found	PLCC healthy,A/R enabled, Bihar will review
400KV KhSTPP-BARH-II	15-02-2019	3:24	15-02-2019	5:44	B-N , Z2 , 30%	B-N , Z1 , 165 KM , 3.2 KA	B-N Fault	< 100 msec	No A/R operation found	NTPC to update
400KV KHARAGPUR-KOLAGHAT-I	16-02-2019	10:46	16-02-2019	10:57	Z1,R-N,58.07KM,3.73KA	Z1,R-N,15.18KM,8.73KA	R-N Fault	< 100 msec	No A/R operation found	DT sent by Kolaghat, Problem rectified for Line-II , for line-I yet to be solved. Digital PLCC to be installed
400KV RAJARHAT-JEERAT-SC	19-02-2019	23:51	20-02-2019	16:31	B-Ph loc 11 insulator flashover	--	B-Ph insulator flashover	< 100 msec	No A/R operation found	A/R was disabled , now enabled
400KV SUBHASGRAM(PG)-RAJARHAT-SC	20-02-2019	0:43	20-02-2019	1:20	B-Ph loc 11 insulator flashover	--	B-Ph insulator flashover	< 100 msec	No A/R operation found	
400KV SUBHASGRAM(PG)-RAJARHAT-SC	20-02-2019	1:23	20-02-2019	16:06	B-Ph loc 11 insulator flashover	--	B-Ph insulator flashover	< 100 msec	No A/R operation found	
400KV ARAMBAGH-BAKRESWAR-SC	25-02-2019	3:00	25-02-2019	16:53	Z-1,Y-PH,38.44KM,FC 8.03 KA	Z-1,Y-N,100.7KM,FC 3.26KA ;ICT 2 ALSO TRIPPED ON Y PH DIFFERENTIAL	Y-N Fault	< 100 msec	No A/R operation found	Issue resolved.
400KV JEERAT-SAGARDIGHI-SC	26-02-2019	2:12	26-02-2019	2:57	Y-N,Z1,FD 91.77KM,FC 3.16 KA	--	Y-N Fault	< 100 msec	A/R successful at one end only	WB to update, A/R successful at Jeerat
220KV BARIPADA-BALASORE-I	27-02-2019	12:15	26-02-2019	12:43	FD 45.81 KM , IB 3 KA, Z1, B-N	--	B-N Fault	< 100 msec	No A/R operation found	PLCC problem, work is under progress
400KV KHARAGPUR-KOLAGHAT-I	27-02-2019	16:30	27-02-2019	16:47	--	A/R successful , R-N, Z-1	R-N Fault	< 100 msec	No A/R operation found	WBSETCL/WBPDCL to update
220KV DARBHANGA (DMTCL)-MOTIPUR-II	27-02-2019	9:43	27-02-2019	10:22	Z2, RN, 37.5 KM	--	R-N Fault	< 100 msec	No A/R operation found	PLCC available, A/R not attempted at Motipur, BSPTCL to update

ANNEXURE-C2

Sl No.	Name of the incidence	PCC Recommendation	Latest status
76th PCC Meeting			
1.	Disturbance at 220kV New Bargarh S/S on 05-01-19 at 10:51 hrs.	ERLDC informed that analog channels and LBB related channels were not configured in the DR and advised OPTCL to configure the DR for better analysis of the disturbance.	OPTCL informed that DR channels have been configured as per the PCC recommendations.
2.	Disturbance at 220 kV Katapalli S/s on 07.01.2019 at 15:40 hrs.	PCC advised OPTCL to send the details of Hindalco islanding scheme to analyze the reasons behind failure of the islanding scheme during this disturbance	
3.	Disturbance at 400kV Gaya(PG), 220kV Gaya and Bodhgaya on 05-01-19 at 11:20 hrs	PCC advised Powergrid to review the distance relay reach and power swing blocking settings of Gaya(PG) end of 220kV Gaya(PG)-Bodhgaya Line-II. PCC advised BSPTCL to review the Khijasarai end relay settings to avoid unwanted tripping at Khijasarai end and submit the relay settings to ERPC for inclusion in PDMS.	Powergrid informed that distance relay settings has been reviewed as per PCC recommendations. BSPTCL informed that they will send the relay settings at the earliest.
4.	Disturbance at 220kV Hazipur on 23-01-19 at 12:33 hrs	PCC advised BSPTCL to address the issue of disc damage of GIS bay with the concerned OEM and also advised to implement the bus sectionalizer to avoid complete blackout of the substation	BSPTCL informed that the issue of disc damage of GIS bays has already been addressed. Regarding implementation of Bus-sectionalizer, they informed that they are exploring the possibilities.
5.	Disturbance at 400 kV Muzaffarpur S/s on 05.01.2019 at 06:56 hrs.	PCC advised Powergrid to verify and submit the details to ERPC and ERLDC	Powergrid informed that the issue was due to problem in accumulator of circuit breaker which has been resolved now.

6.	Islanding of CESC on 19.01.19 at 1845 Hrs	PCC advised CESC to review the backup overcurrent settings at Howrah(WBSETCL) in consultation with WBSETCL	
7.	Mutual effect 400kV Andal-Jamshedpur-II on 400 kV Adhunik-Jamshedpur D/C	PCC advised Adhunik and POWERGRID to analyze the event in detail to find the root cause in consultation with the ERPC and ERLDC. PCC also advised Adhunik to submit the details of PSS tuning to ERLDC/ERPC	
8.	Disturbance at 400/220 kV Alipurduar (Powergrid) S/s on 05.12.18 at 10:29 hrs.	PCC advised Powergrid submit the latest status to ERPC and ERLDC.	Powergrid submitted the detailed report.
74th PCC Meeting			
9.	Multiple tripping incident at Darbhanga at 13:33 hrs on 06-11-18 and at 15:23 hrs on 06-11-18	PCC suggested to keep the highset setting more than 7 and advised DMTCL to review the settings.	
10.	74th PCC Single line tripping of 400 KV Bihar sharif-Sasaram-1 on On 17/11/18 at 6:10 Hrs	POWERGRID was advised to submit a detail report and remedial measure taken to ensure such event does not take place in future.	Powergrid informed that the tripping occurred due to maloperation of Teed protection(EM type relay). The EM type relay will be replaced with numerical relay within 6 months.
12.	Total power failure at 220kV Hatia (JUSNL) S/s on 20.07.18 at 09:10 hrs.	PCC also advised JUSNL to test the healthiness of the relays at 220kV Patratu and 220/132kV Hatia S/s on urgent basis.	JUSNL informed that the relay healthiness testing has been completed and necessary actions were taken. They have submitted a report in the meeting.
73rd PCC Meeting			
13.	Total Power failure at 220 kV Hatia (JUSNL) substation on 03.10.18 at 17:23 hrs and on 04.10.18 at 00:26 hrs	PCC advised JUSNL to test the Bus bar and LBB protection, PLCC and configuration of DT signal in the relay at Hatia end.	JUSNL informed that the all the testing were completed.

14.	Total Power failure at TLDP-III S/s on 27.10.18 at 10:24 hrs.	PCC advised WBSETCL and NHPC to review the DEF settings for proper protection coordination between the transmission lines and generating station.	PCC advised PRDC to coordinate the settings with reference to GT of TLDP side.
15.	Disturbance at Purnea	From DR it was observed that DEF protection of 220 kV Purnea(PG)-Purnea line at PG end did not reset even after Neutral current reduced to negligible value.	Powergrid informed that old DEF relay will be replaced with new relay within 3 months.
72nd PCC Meeting			
16.	HVDC TFR triggering standardization and reporting requirements.	PCC advised POWERGRID to submit TFR triggering criteria and TFR signal list for all HVDC station of Eastern region to ERLDC	
71st PCC Meeting			
17.	Disturbance at 220/132 kV Motipur(BSPTCL) S/s on 15.08.18 at 13:00 hrs.	PCC advised BSPTCL to check the disturbance recorders of all the lines in 220 kV Motipur S/s and communicate the findings to ERPC/ERLDC at the earliest.	BSPTCL informed that DR of 15.08.18 is not available in the relay. They added that OEM will visit the station within next month for reconfiguration of relay.
18.	Disturbance at 400 kV Farakka S/s on 19.08.18 at 15:26 hrs.	PCC advised NTPC to replace/divert Micom P437 relay to avoid unwanted tripping of such important transmission line. PCC also advised to check the reason for not sending carrier from Farakka to Kahalgaon and non-operation of Autorecloser.	NTPC informed that the relay has been replaced. They added that the carrier healthiness will be checked at next available shutdown.
68th PCC Meeting			

19.	Issues related with Generation Backing down during Talcher-Kolar SPS operation on 16th May 2018.	PCC advised Powergrid to explore for inclusion of pole block with ground return mode signal in the SPS logic. PCC advised NTPC also to explore for inclusion of pole block with ground return mode signal in the SPS logic.	PCC advised Powergrid and NTPC to coordinate and implement pole block with ground return mode signal in SPS.
20.	Issue of Protection Coordination Observed during Blackout of Tala on 23rd May 2018.	PCC advised Bhutan representatives to submit a detailed report on the above disturbance to ERPC and ERLDC at the earliest.	

Annexure-C5

SL NO.	Line Details		Calculated Settings				UPDATED RELAY DETAILS							
	From Bus Name	To Bus Name	Z3 Ohms (Primary)	Z3 Ohms (Secondary)	R Reach (secondary)		Main - 1				Main - 2			
					PP	PN	Relay Model	Zone3	R3-PP	R3-PG	Relay Model	Zone3	R3-PP	R3-PG
132 kv														
1	GANGTOK	RANGPO												
	GANGTOK		40.29	10.07	25.51	34.01	**SEL 311C**	11.85	-	35.5				
	RANGPO		36.62	12.21	34.01	45.34	**P444**	12.34	50	64.01				
2	MELLI	SILLIGURI												
	MELLI		60.96	0.00	0.00	0.00								
	SILLIGURI		61.31	20.44	34.01	45.34	**7SA522**	20.44	12.5	30.43	-	-	-	-
3	GANGTOK	RANGPO												
	GANGTOK		39.32	9.83	25.51	34.01	**SEL 311C**	7	-	6.6				
	RANGPO		37.49	12.50	34.01	45.34	**P444**	12.34	50	64.01				
4	BIRPARA	CHUKHA 1												
	BIRPARA		68.05	27.22	44.17	58.90	**P442**	27.17	30	35.49	**REL670**	66.9	75	125
	CHUKHA 1		72.80	29.12	44.17	58.90	**P442**							
5	BIRPARA	CHUKHA 2												
	BIRPARA		68.05	27.22	44.17	58.90	**P442**	27.17	30	35.49	**REL670**	73.59	82.7	137.5
	CHUKHA 2		72.80	29.12	44.17	58.90								
6	BINAGURI	SILIGURI 1												
	BINAGURI		55.40	22.16	44.17	58.90	**P444**	22.15	40	61		54.5		
	SILIGURI 1		41.68	16.67	44.17	58.90	**P442**	16.68	35.49	30	**REL670**	41	75	125
7	BINAGURI	SILIGURI 2												
	BINAGURI		55.40	22.16	44.17	58.90	**P444**	22.15	40	61		54.5		
	SILIGURI 2		41.68	16.67	44.17	58.90	**P442**	16.68	35.49	30	**REL670**	41	75	125
8	MALDA	DALKHOLI 1												
	MALDA		112.45	44.98	44.17	58.90	**P442**	45	30	38.19	**REL670**	111	75	125
	DALKHOLI 1		112.45	0.00	0.00	0.00								
9	MALDA	DALKHOLI 2												
	MALDA		112.45	44.98	44.17	58.90	**P442**	45	30	38.19	**REL670**	111	75	125
	DALKHOLI 2		112.45	0.00	0.00	0.00								
10	RANGPO	NEW MILLI												
	RANGPO		18.18	14.54	88.35	117.80	**P442**	17.76	32.27	32.27				
	NEW MILLI		24.72	19.78	88.35	117.80	**P444**	26.99	80	122.44	**REL670**	12.46	100	102
11	RANGPO	JORTHANG												
	RANGPO		17.69	14.15	88.35	117.80	**P442**	17.87	80	122.4				
	JORTHANG		24.72	4.94	22.09	29.45	**P442**	17.76	32.27	32.27				
12	NEW MILLI	JORTHANG												
	NEW MILLI		9.69	7.76	88.35	117.80	**P444**	7.78	80	122.44	**REL670**	9.5	100	102
	JORTHANG		17.45	3.49	22.09	29.45	**P442**	10	80	122				

13	SILIGURI	DALKHOLI 1/Kisanganj												
	SILIGURI		104.69	41.88	44.17	58.90	**P442**	41	30	35.52	**REL670**	103	75	125
	DALKHOLI 1		104.69	0.00	0.00	0.00								
14	SILIGURI	DALKHOLI 2/Kisanganj												
	SILIGURI		104.69	41.88	44.17	58.90	**P442**	41	30	35.52	**REL670**	103	75	125
	DALKHOLI 2		104.69	0.00	0.00	0.00								
400 KV														
15	BINAGURI	BONGAIGAON 1												
	BINAGURI		178.57	49.11	24.47	32.62	**REL670**	176	75	125	**P442**	48	20.64	20.6
	BONGAIGAON 1		173.60	0.00	0.00	0.00								
16	BINAGURI	BONGAIGAON 2												
	BINAGURI		178.57	49.11	24.47	32.62	**REL670**	176	75	125	**P442**	48	20.64	20.6
	BONGAIGAON 2		173.60	0.00	0.00	0.00								
17	BAHAARAMPUR	BEHRAMARA 1												
	BAHAARAMPUR		80.80	22.22	24.47	32.62	**P444**	20.55	20.63	20.64	**REL670**	74.51	75	125
	BEHRAMARA 1		80.80	0.00	0.00	0.00								
18	BAHAARAMPUR	BEHRAMARA 2												
	BAHAARAMPUR		80.80	22.22	24.47	32.62	**P444**	20.55	20.63	20.64	**REL670**	74.51	75	125
	BEHRAMARA 2		80.80	0.00	0.00	0.00								
19	BAHAARAMPUR	FARAKKA												
	BAHAARAMPUR		91.60	50.38	48.93	65.24	**P444**	46.6	20.63	41.44	**REL670**	94.57	75	125
	FARAKKA		69.60	38.28	48.93	65.24	**P444**	41	25.4	33.87				
20	BAHAARAMPUR	SAGARDIGHI 1												
	BAHAARAMPUR		112.80	62.04	48.93	65.24	**P444**	55.45	29	37	**P546**	59.6	-	-
	SAGARDIGHI		50.80	27.94	48.93	65.24	**P444**	32.75	55	84	**P546**	32.78	88	74
21	BAHAARAMPUR	SAGARDIGHI 2												
	BAHAARAMPUR		112.80	62.04	48.93	65.24	**P444**	55.45	29	37	**P546**	59.6	-	-
	SAGARDIGHI		50.80	27.94	48.93	65.24	**P444**	32.75	55	84	**P546**	32.78	88	74
22	JEERAT	SUBHASGRAM												
	JEERAT		130.40	35.86	24.47	32.62	**P442**	35.4	29.6	20.6	**REL670**	128.4	75	125
	SUBHASGRAM		106.88	29.39	24.47	32.62	**P444**	29.03	29.6	20.6	**7SA522**	28.92	10.31	13.87
23	MALDA	FARAKKA 1												
	MALDA		76.00	41.80	48.93	65.24	**P442**	40	37.15	23.68	**REL670**	72.24	75	125
	FARAKKA 1		82.80	45.54	48.93	65.24	**P442**	41.4	25.4	33.87				
24	MALDA	FARAKKA 2												
	MALDA		76.00	41.80	48.93	65.24	**P442**	40	37.15	23.68	**REL670**	72.24	75	125
	FARAKKA 2		82.80	0.00	0.00	0.00	**P442**	41.4	25.4	33.87				
25	MALDA	PURNEA 1												
	MALDA		137.30	37.76	24.47	32.62	**P442**	36.4	20.63	20.69	**REL670**	132	100	102
	PURNEA 1		133.60	36.74	24.47	32.62	**P442**	36.74	20.63	20.69	**7SA522**	36.59	10.31	13.87
26	MALDA	PURNEA 2												
	MALDA		137.30	37.76	24.47	32.62	**P442**	36.4	20.63	20.69	**REL670**	132	75	125

	PURNEA 2		133.60	36.74	24.47	32.62	**P442**	36.74	20.63	20.69	**7SA522**	36.59	10.31	13.87
27	RANGPO	BINAGURI 1												
	RANGPO		130.80	71.94	48.93	65.24	**P444**	71.5	20.63	41.29		129		
	BINAGURI 1		119.60	65.78	48.93	65.24	**P444**	64.9	41.25	41.29	**REL670**	101.5	75	125
28	RANGPO	BINAGURI 2												
	RANGPO		130.80	71.94	48.93	65.24	**P444**	71.5	20.63	41.29		129		
	BINAGURI 2		119.60	65.78	48.93	65.24	**P444**	64.9	41.25	41.29	**REL670**	101.5	75	125
29	RANGPO	TEESTA 1												
	RANGPO		9.86	5.42	48.93	65.24	**P442**	5.35	37.5	68.75				
	TEESTA 1		64.13	0.00	0.00	0.00		11						
30	RANGPO	TEESTA 2												
	RANGPO		9.86	5.42	48.93	65.24	**P442**	5.35	37.5	68.75				
	TEESTA 2		64.13	0.00	0.00	0.00		6.85	25.4	33.87				
31	SAGARDIGHI	SUBHASGRAM												
	SAGARDIGHI		134.40	73.92	48.93	65.24	**RCS-902D**	93.98	-	-	**RCS-902D**	93.98	-	-
	SUBHASGRAM		177.28	48.75	24.47	32.62	**P442**	49.3	20.63	20.69	**7SA522**	49.3	10.31	13.87
32	TALA	BINAGURI 3												
	TALA		126.00	0.00	0.00	0.00								
	BINAGURI 3		85.20	23.43	24.47	32.62	**P442**	30.3	20.63	20.64	**REL670**	55.33	75	125

SL NO.	Line Details		Calculated			UPDATED RELAY DETAILS			
	From Bus Name	To Bus Name	Z3 Ohms (Primary)	Z3 Ohms (Secondary)	R Reach	Main - 1			
					PP	Relay Model	Zone3	R3-PP	R3-PG
400 kV									
1	MTPS	MAITHON PG							
	MTPS		113.55	62.45	65.24	**REL670**	113.15		
2	MTPS	JAMSHEDPUR							
	MTPS		139.94	76.96	65.24	**REL670**	139.94		
	JAMSHEDPUR		105.95	29.14	32.62	**P442**			
3	RTPS	RANCHI PG (DC)							
	RTPS		208.67	114.77	32.60	**REL670**	209		
4	RTPS	MAITHON PG (SC)							
	RTPS		100.08	55.04	65.24	**REL670**	100.76		
220 KV									
1	DHANBAD	MAITHON PG							
	DHANBAD		55.32	22.13	58.90	**REL670**	49.46		
2	WARIA	BIDHANNAGAR WBSETCL							
	WARIA		28.31	11.32	58.90	**REL670**	68		

	ERPC Proposed	Guide Lines
		Internal protection trip signals, external trigger input, analog triggering (any phase current exceeding 1.5 pu of CT secondary current or any phase voltage below 0.8pu, neutral/residual overcurrent greater than 0.25pu of CT secondary current).
Triggering criteria for DR :	Any Start	
DR time window :	minimum 3 seconds.	minimum 2 seconds.
Pre-fault time window (S):	0.5	-
Post fault time window (S):	2.5	0.3
Minimum sampling frequency:	1000 Hz	64 Samples Per Cycle
Analog signals as per priority		
A. Mandatory signals:		
	1. Three phase voltage	1. Three phase-to-neutral voltages
	2. Neutral voltage	2. Three phase currents and neutral currents.
	3. Three phase current	3. Neutral Currents
	4. Neutral current	4. Frequency
B. Optional signals:		
	1. Mutual current	1. Polarizing currents and voltages, if used.
	2. Check Sync	2. Real and reactive power
	3. Open Delta	The Minimum parameters to be monitored in the Fault record shall be specified by the respective RPC.
Digital signals as per priority		
A. Mandatory signals:		
	1. Any Start	
	2. Any trip	
	3. Z1, Z2, Z3, Z4 pick up	
	4. Over current and Earth fault pick up	
	5. Over voltage stage I & II pick up	
	6. DT send & reverse	
	7. Carrier send & Receive	
	8. Main three phase CB open signal	
	9. Tie three phase CB open signal (where applicable)	
	10. Power Swing	
	11. SOTF/TOR	
	12. LBB	
	13. A/R L/O	
	14. Main-1/2 operated	
	15. Bus Bar trip	
	16. VT failure	
	17. Distance Forward & Reverse	
	18. T1, T2, T3, T4	
	19. Broken conductor	
	20. 86A & 86B	
	21. A/R 1P In Prog	
	22. A/R Fail	
	23. STUB/TEED (where applicable)	
B. Optional signals:		
	1. Any External input	
	2. Any Binary Input	

	ERPC Proposed	Guide Lines
Triggering criteria for DR :	Any Start	Internal protection trip signals, external trigger input, analog triggering (any phase current exceeding 1.5 pu of CT secondary current or any phase voltage below 0.8pu, neutral/residual overcurrent greater than 0.25pu of CT secondary current).
DR time window :	minimum 3 seconds.	minimum 2 seconds.
Pre-fault time window (S):	0.5	-
Post fault time window (S):	2.5	0.3
Minimum sampling frequency:	3200Hz	64 Samples Per Cycle
Analog signals as per priority		
A. Mandatory signals:		
	1. Three Phase Currents & Neutral Currents of HV 2. Three Phase Currents & Neutral Currents of LV 3. Three Phase Currents & Neutral Currents of MV 4. I_REF HV 5. I_REF LV 6. I_REF MV 7. Voltages 8. Frequency 9. Differential Currents 10. Restraining Currents 11. Low Impedence REF-DIFF - of all windings 12. Low Impedence REF-Restraining - of all windings	
Digital signals as per priority		
	1. Any Start 2. Any trip 3. Differential Trip 3. REF Trip HV, MV & LV 4. Over-current Trip 5. Earth Fault Trip 6. Over Flux 7. Over Voltage 8. Under Voltage 9. 2nd Harmonic 10. 5th Harmonic 11. Frequency Protection 12. External Trip Signals	

	ERPC Proposed	Guide Lines
Triggering criteria for DR :	Any Start	Internal protection trip signals, external trigger input, analog triggering (any phase current exceeding 1.5 pu of CT secondary current or any phase voltage below 0.8pu, neutral/residual overcurrent greater than 0.25pu of CT secondary current).
DR time window :	minimum 3 seconds.	minimum 2 seconds.
Pre-fault time window (S):		0.5 -
Post fault time window (S):		2.5 0.3
Minimum sampling frequency:	3200Hz	64 Samples Per Cycle
Analog signals as per priority		
A. Mandatory signals:	1. 3Phase Diff Current 2. 3Phase Bias Current 3. Neutral Differential Current 4. Neutral Bias Current	
B. Optional Signals:	1. Individual Feeder Currenrts if available 2. Zone wise Differential and Bias Currents	
Digital signals as per priority		
	1. Any Start 2. Any trip 3. R-Phase Fault 4. Y-Phase Fault 5. B-Phase Fault 6. Earth Fault 7. Check Zone Operated 8. Zone 1 BB Fault 9. Zone 2 BB Fault 10. Trip Bus bar Zone 1 11. Trip Bus bar Zone 2 12. Trip Breaker Failure Zone 1 13. Trip Breaker Failure Zone 2 14. Bus bar Differential Blocked	