Agenda
for
126th PCC Meeting

Date:17/05/2023
Eastern Regional Power Committee
14, Golf Club Road, Tollygunge
Kolkata: 700 033

EASTERN REGIONAL POWER COMMITTEE

AGENDA FOR 126th PROTECTION COORDINATION SUB-COMMITTEE MEETING TO BE HELD ON 17.05.2023 AT 10:30 HRS THROUGH MS TEAMS PLATFORM

PART – A

ITEM NO. A.1: Confirmation of Minutes of 125th Protection Coordination sub-Committee Meeting held on 19th April 2023 through MS Teams online platform.

The minutes of 125th Protection Coordination sub-Committee meeting held on 19.04.2023 was circulated vide letter dated 26.04.2023.

Members may confirm.

PART – B

ITEM NO. B.1: Total Power Failure at 220 kV Chandil S/s on 27.04.2023 at 07:12 Hrs

On 27.04.2023 at 07:12 Hrs, 220 kV Bus PT at Chandil S/s got burst. Subsequently all the elements got tripped resulting in total power failure at Chandil S/s. As reported, busbar protection is not available at 220 kV Chandil S/s.

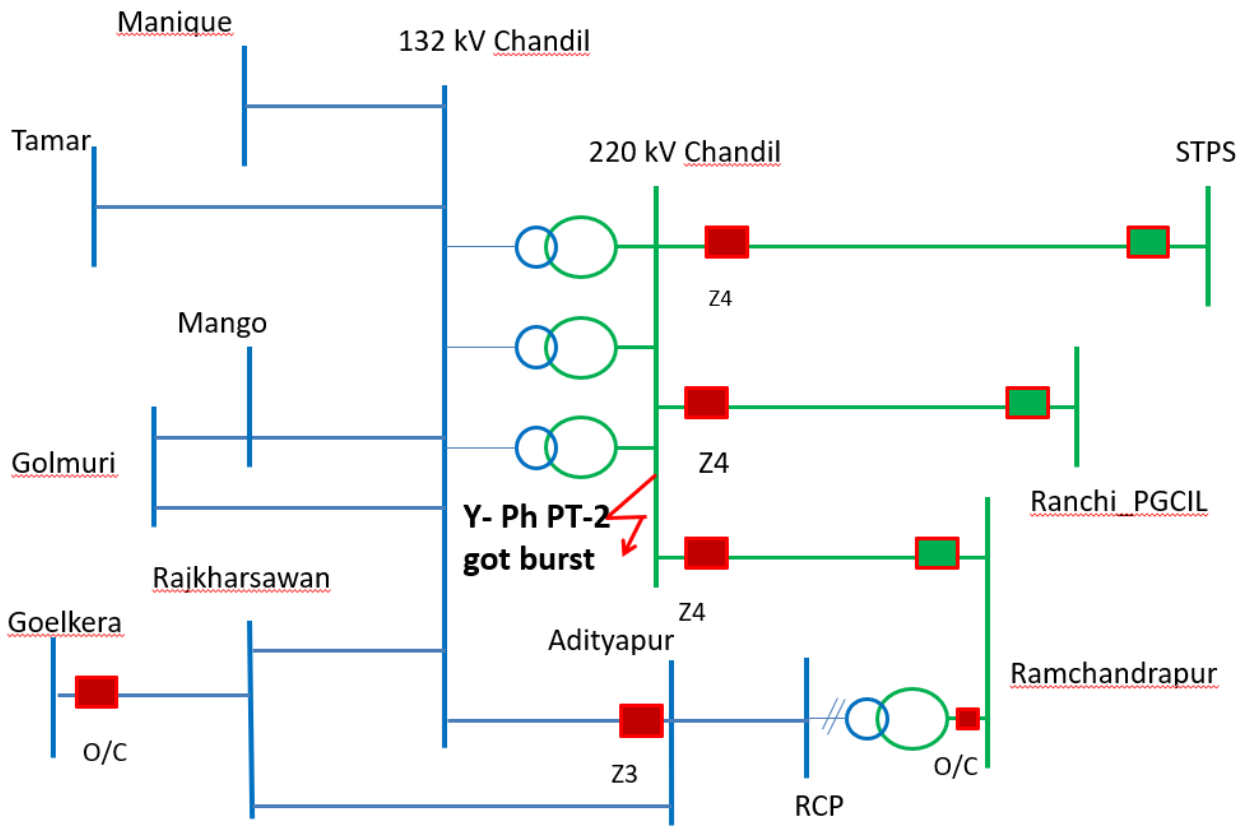

Detailed report from ERLDC is attached at **Annexure B.1.** Presentation from JUSNL is attached at **Annexure B.1.2.**

Load Loss: 250 MW
Outage Duration: 00:21 Hrs
JUSNL may explain.

ITEM NO. B.2: Disturbance at 220 kV Tenughat S/s on 18.04.2023 at 13:19 Hrs

At 13:19 Hrs, B phase CT of 220 kV Tenughat-Govindpur-2 got burst at Tenughat. At the same time, both running units at Tenughat also got tripped.

Detailed report from ERLDC is attached at **Annexure B.2.**

Gen. Loss: 305 MW
Outage Duration: 00:56 Hrs

TVNL may explain.

ITEM NO. B.3: Repeated Tripping of 400 kV Teesta III-Dikchu line

A) On 17.04.2023 at 21:33 Hrs

400 kV Rangpo-Dikchu got tripped due to B phase fault leading to tripping of all running units at Teesta 3 and Dikchu due to loss of evacuation path as 400 kV Teesta 3-Rangpo had already tripped at 20:53 Hrs due to Y_B_N fault.

Detailed report from ERLDC is attached at **Annexure B.3.**

Gen. Loss: 1234 MW
Outage Duration: 00:35 Hrs

B) On 17.04.2023 at 22:53 Hrs

400 kV Rangpo-Dikchu got tripped again due to B phase fault leading to tripping of all running units at Teesta 3 and Dikchu.

Gen. Loss: 1237 MW
Outage Duration: 00:28 Hrs

C) On 18.04.2023 at 03:27 Hrs

On 18.04.2023 at 03:27 Hrs, 400 kV Rangpo-Dikchu got tripped due to B phase fault leading to tripping of all running units at Teesta 3 and Dikchu due to loss of evacuation path as 400 kV Teesta 3-Rangpo was already under breakdown.

Gen. Loss: 1096 MW
Outage Duration: 00:36 Hrs

Teesta III HEP and Dikchu HEP may explain.

ITEM NO. B.4: Tripping of 400 kV Barh-Kahalgaon-2 at 08:21 Hrs on 15.04.2023

While availing shutdown of 400 kV Barh-Motihari-2, its dia element at Barh i.e. 400 kV Barh-Kahalgaon-2 got tripped. As reported, tie bay of this dia was not opened and in live condition isolator opening was attempted at Barh. 400 kV Barh-Kahalgaon-2 tripped immediately from Barh,

however, it should have tripped in Zone-4 after 500 msec, which if had happened, total blackout would have occurred at Barh S/s and around 1900 MW generation loss would have occurred.
A brief report is attached as **Annexure B.4.**

NTPC Barh may explain. Members may discuss.

ITEM NO. B.5: Frequent tripping of FSC of 400 kV Jeypore-Gazuwaka D/c

In last 3 months, FSC of 400 kV Jeypore-Gazuwaka D/c had tripped 50 times, mostly either due to transient undercurrent or bypass CB status discrepancy. FSCs should not bypass for transient undercurrent for short duration say 100 msec. It is observed that FSCs installed at other S/s are not tripping at this frequency. Details of tripping of FSCs are as below:

SrNo	Element Name	Tripping Date	Tripping Time	Reason	Revival Date	Revival Time
1	FSC OF 400KV-JEYPORE-GAZUWAKA-1 AT JEYPORE	10-05-2023	04:45	R_ph Bypass CB discrepancy		
2	FSC OF 400KV-JEYPORE-GAZUWAKA-1 AT JEYPORE	05-05-2023	16:30	Bypass CB status discrepancy	09-05-2023	17:57
3	FSC OF 400KV-JEYPORE-GAZUWAKA-1 AT JEYPORE	05-05-2023	05:20	Due to status discrepancy	05-05-2023	16:25
4	FSC OF 400KV-JEYPORE-GAZUWAKA-1 AT JEYPORE	05-05-2023	00:06	MOV high energy and signal missing(Y_ph)	05-05-2023	01:05
5	FSC OF 400KV-JEYPORE-GAZUWAKA-1 AT JEYPORE	04-05-2023	20:16	Bypass CB status discrepancy	04-05-2023	21:23
6	FSC OF 400KV-JEYPORE-GAZUWAKA-1 AT JEYPORE	03-05-2023	16:24	Bypassed due to lockout operated in Y_ph	03-05-2023	21:55
7	FSC OF 400KV-JEYPORE-GAZUWAKA-1 AT JEYPORE	02-05-2023	15:30	Bypass CB status discrepancy	02-05-2023	17:58
8	FSC OF 400KV-JEYPORE-GAZUWAKA-2 AT JEYPORE	01-05-2023	07:29	Transient Undercurrent	01-05-2023	12:26
9	FSC OF 400KV-JEYPORE-GAZUWAKA-1 AT JEYPORE	29-04-2023	22:50	transient undercurrent	01-05-2023	14:51
10	FSC OF 400KV-JEYPORE-GAZUWAKA-1 AT JEYPORE	27-04-2023	08:50	Bypassed due to Transient Undercurrent.	27-04-2023	15:47

11	FSC OF 400KV-JEYPORE-GAZUWAKA-2 AT JEYPORE	27-04-2023	09:55	Bypassed due to signal missing	27-04-2023	11:41
12	FSC OF 400KV-JEYPORE-GAZUWAKA-1 AT JEYPORE	25-04-2023	19:45	Due to under current	26-04-2023	17:00
13	FSC OF 400KV-JEYPORE-GAZUWAKA-2 AT JEYPORE	26-04-2023	15:51	Bypassed due to capacitor unbalance and subsequently lockout operated	26-04-2023	18:34
14	FSC OF 400KV-JEYPORE-GAZUWAKA-2 AT JEYPORE	25-04-2023	16:31	Transient undercurrent	25-04-2023	17:37
15	FSC OF 400KV-JEYPORE-GAZUWAKA-1 AT JEYPORE	25-04-2023	16:31	Transient undercurrent	25-04-2023	17:37
16	FSC OF 400KV-JEYPORE-GAZUWAKA-1 AT JEYPORE	23-04-2023	05:27	Y-Ph lockout operation	24-04-2023	19:09
17	FSC OF 400KV-JEYPORE-GAZUWAKA-2 AT JEYPORE	24-04-2023	16:59	current Signal from Breaker to FSC Missing	24-04-2023	19:09
18	FSC OF 400KV-JEYPORE-GAZUWAKA-1 AT JEYPORE	18-04-2023	12:16	due to transient under current	18-04-2023	18:10
19	FSC OF 400KV-JEYPORE-GAZUWAKA-2 AT JEYPORE	11-04-2023	13:35	Bypassed due to Transient Under current	12-04-2023	13:31
20	FSC OF 400KV-JEYPORE-GAZUWAKA-1 AT JEYPORE	11-04-2023	13:35	Bypassed due to Transient Under current	12-04-2023	13:31
21	FSC OF 400KV-JEYPORE-GAZUWAKA-1 AT JEYPORE	09-04-2023	15:37	due to transient under current	10-04-2023	11:17
22	FSC OF 400KV-JEYPORE-GAZUWAKA-1 AT JEYPORE	07-04-2023	19:25	TRIPPED DUE TO TRANSIENT UNDER CURRENT	07-04-2023	20:56
23	FSC OF 400KV-JEYPORE-GAZUWAKA-2 AT JEYPORE	06-04-2023	20:47	UNDERCURRENT	07-04-2023	16:27
24	FSC OF 400KV-JEYPORE-GAZUWAKA-2 AT JEYPORE	04-04-2023	19:04	Under current	05-04-2023	11:29

25	FSC OF 400KV-JEYPORE-GAZUWAKA-1 AT JEYPORE	04-04-2023	19:04	Under current	05-04-2023	11:29
26	FSC OF 400KV-JEYPORE-GAZUWAKA-1 AT JEYPORE	02-04-2023	19:45	tripped due to under current	02-04-2023	22:26
27	FSC OF 400KV-JEYPORE-GAZUWAKA-2 AT JEYPORE	30-03-2023	01:33	General Lockout operated.	30-03-2023	14:08
28	FSC OF 400KV-JEYPORE-GAZUWAKA-1 AT JEYPORE	28-03-2023	13:31	Due to Capacitor Unbalance and Lockout optd in R phase.	28-03-2023	13:58
29	FSC OF 400KV-JEYPORE-GAZUWAKA-2 AT JEYPORE	25-03-2023	10:02	Due to under current	25-03-2023	12:14
30	FSC OF 400KV-JEYPORE-GAZUWAKA-1 AT JEYPORE	25-03-2023	10:02	Due to under current	25-03-2023	12:14
31	FSC OF 400KV-JEYPORE-GAZUWAKA-2 AT JEYPORE	25-03-2023	02:40	Due to transient undercurrent.	25-03-2023	07:59
32	FSC OF 400KV-JEYPORE-GAZUWAKA-1 AT JEYPORE	25-03-2023	02:40	Due to transient undercurrent.	25-03-2023	07:59
33	FSC OF 400KV-JEYPORE-GAZUWAKA-1 AT JEYPORE	22-03-2023	17:01	Transient under current	22-03-2023	19:34
34	FSC OF 400KV-JEYPORE-GAZUWAKA-1 AT JEYPORE	22-03-2023	02:33	Due to undercurrent transient in Y phase.	22-03-2023	07:36
35	FSC OF 400KV-JEYPORE-GAZUWAKA-1 AT JEYPORE	19-03-2023	04:57	Transient undercurrent in R-ph and B-ph.	21-03-2023	12:35
36	FSC OF 400KV-JEYPORE-GAZUWAKA-2 AT JEYPORE	19-03-2023	04:57	Transient undercurrent in R-ph and B-ph.	19-03-2023	13:24
37	FSC OF 400KV-JEYPORE-GAZUWAKA-1 AT JEYPORE	18-03-2023	16:45	BYPASSED DUE TO UNDER CURRENT	18-03-2023	20:06
38	FSC OF 400KV-JEYPORE-GAZUWAKA-1 AT JEYPORE	09-03-2023	00:50	FSC bypassed due to undercurrent	09-03-2023	10:15

39	FSC OF 400KV-JEYPORE-GAZUWAKA-1 AT JEYPORE	02-03-2023	12:03	Transient under current.	03-03-2023	06:26
40	FSC OF 400KV-JEYPORE-GAZUWAKA-1 AT JEYPORE	25-02-2023	23:33	Due to undercurrent	27-02-2023	14:56
41	FSC OF 400KV-JEYPORE-GAZUWAKA-2 AT JEYPORE	22-02-2023	05:41	Due to under current detection	22-02-2023	07:15
42	FSC OF 400KV-JEYPORE-GAZUWAKA-1 AT JEYPORE	22-02-2023	05:41	Due to under current detection	22-02-2023	07:15
43	FSC OF 400KV-JEYPORE-GAZUWAKA-1 AT JEYPORE	21-02-2023	00:46	Due to general lockout	21-02-2023	13:09
44	FSC OF 400KV-JEYPORE-GAZUWAKA-2 AT JEYPORE	20-02-2023	15:51	Bypassed due to transient under current detection	20-02-2023	17:41
45	FSC OF 400KV-JEYPORE-GAZUWAKA-1 AT JEYPORE	20-02-2023	15:51	Bypassed due to transient under current detection	20-02-2023	17:41
46	FSC OF 400KV-JEYPORE-GAZUWAKA-2 AT JEYPORE	17-02-2023	17:46	Bypassed due to signal missing	17-02-2023	23:42
47	FSC OF 400KV-JEYPORE-GAZUWAKA-2 AT JEYPORE	17-02-2023	11:03	BYPASSED DUE TO SINGNAL MISSING	17-02-2023	13:54
48	FSC OF 400KV-JEYPORE-GAZUWAKA-1 AT JEYPORE	16-02-2023	10:10	Bypassed due to General lockout (contactor burnt)	16-02-2023	12:30
49	FSC OF 400KV-JEYPORE-GAZUWAKA-2 AT JEYPORE	21-12-2022	10:25	Bypassed due to undercurrent	07-02-2023	17:06
50	FSC OF 400KV-JEYPORE-GAZUWAKA-1 AT JEYPORE	07-02-2023	14:21	Due to transient under current.	07-02-2023	16:35

Powergrid may explain.

ITEM NO. B.6: Tripping Incidence in month of April-2023

Single line tripping incidents in the month of April-2023 which needs explanation from constituents of either end is attached at **Annexure B.6.**

Members may discuss.

PART- C :: OTHER ITEMS

ITEM NO. C.1: Removal of SPS for 2*315 MVA 400/220 kV Ranchi ICTs

500 MVA 400/220 kV ICT-3 at Ranchi is going to be first time charged soon, after which loading of ICTs at Ranchi will remain N-1 compliant. It is suggested that existing SPS scheme at Ranchi for 400/220 kV ICTs may be disabled.

Recent trend of ICT loading for 1st May-8th May'23 is given as-

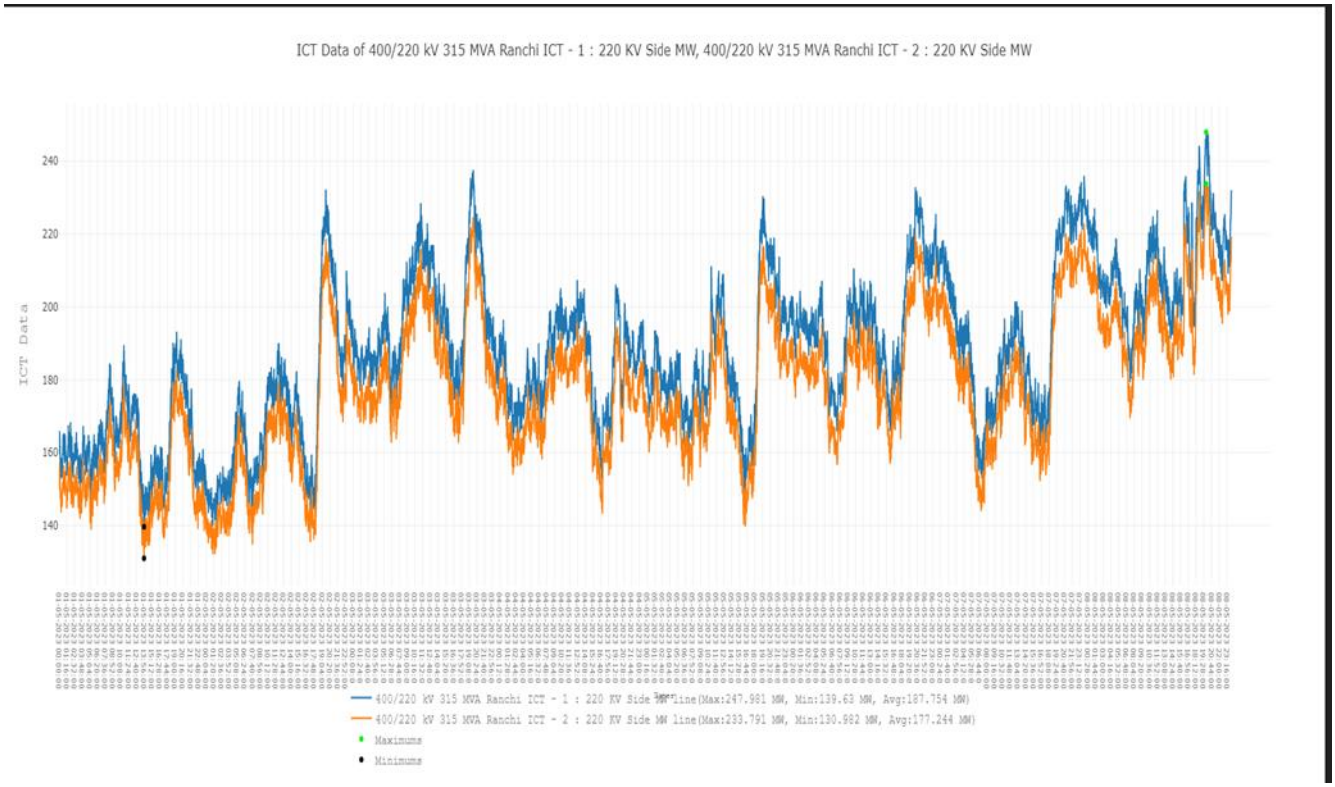

Members may discuss.

ITEM NO. C.2: Implementation of Single-Phase Auto recloser feature in DEF Relays for the 400 kV transmission lines of TPTL-(Agenda by TPTL)

In 108th PCC meeting, the proposal of implementing auto reclosure with DEF protection was discussed and after discussion it was opined that the proposal needs elaborate technical discussion and confirmation from the relay manufacturers regarding provision of the single-phase auto reclosing functionality in DEF relay for which PCC had further advised TPTL to furnish relevant document / information for further discussion in this regard.

Subsequently TPTL had contacted with the relay suppliers of 400 kV D/C Teesta III HEP – Kishanganj transmission line at Teesta III end and Kishanganj end. The supplier of P442 relay at Teesta III HEP end, i.e., M/s GE Renewable Energy has confirmed that single phase tripping and auto reclose is possible in aided DEF protection function in the P442 relay. Further, as per the relay manual of MiCOM P127 relay, supplied by M/s Areva (formerly M/s Schneider) at Teesta III end, auto reclosure feature is available in DEF protection function of the relay. At Kishanganj end it was also confirmed by the relay supplier, i.e., M/s Hitachi Energy (formerly M/s ABB Power

Systems India) that single phase auto reclose is available in DEF protection function of REL670 relay.

In view of above, it is proposed to implement Single Phase Auto recloser feature in DEF Relays for the 400 kV transmission lines of TPTL.

Discussion was held in 121st PCC Meeting regarding this agenda and after detailed deliberation, the following way forward was decided:

- ERLDC to coordinate with NERLDC to get feedback regarding reliability and success rate of auto recloser scheme in DEF relay.
- TPTL to make a detailed presentation on proposed scheme & its logic and on implementation of the scheme at relay level along with wiring & communication channel detailing in next PCC meeting.
- All transmission utilities were advised to share comments to ERPC/ERLDC regarding implementation of single-phase auto reclosing feature in DEF relay.

In 122nd PCC Meeting, ERLDC representative informed that as per communication received from NERLDC, single phase auto-recloser scheme in DEF relay had been implemented in 400 kV Silchar- Imphal d/c and 400 kV Silchar- Misa d/c line and it is operating satisfactorily. He further informed that current reversal guard need to be implemented along with auto recloser scheme in DEF relay for its successful operation.

In 124th PCC, Powergrid representative shared case study paper of IIT Mumbai describing about mal operation of DEF protection resulting in spurious tripping of healthy line. He suggested that comments may be shared by utilities before implementing single phase auto recloser feature in DEF Relays for the 400 kV transmission lines of TPTL.

ERLDC informed that spurious tripping of healthy line is even possible if single phase auto recloser feature is disabled in DEF relays however they requested all utilities to share the observation on the proposed scheme.

TPTL representative informed that as per communication made with M/s GE, the detail scheme & its implementation will be presented at the earliest.

In 125th PCC Meeting, TPTL representative informed that they had received scheme details from M/s GE and they are planning to have a discussion with the OEM before making the presentation in PCC meeting.

PCC advised TPTL to share the scheme/details as received from M/s GE to ERPC/ERLDC. The presentation on detailed logic/scheme may be made in next PCC meeting.

TPTL may update.

ITEM NO. C.3: Delay in uploading DR/EL in PDMS

It has been observed that DR/EL etc. are being uploaded by utilities in PDMS with an inordinate delay. There has been a tendency to upload these files at the end of the month in one go which is not in line with IEGC and hampers proper analysis of the events.

Members may discuss.

ITEM NO. C.4: Submission of protection settings for newly charged elements/change in network configuration

The updated status of protection settings for new elements charged in ER Grid from Nov 22 to April 2023 is given at **Annexure C.4.**

In 123rd PCC Meeting, PCC advised all the utilities to intimate any changes in network configuration in their intra state network regularly and review the settings accordingly & upload the relay settings in PDMS by using DMNS portal or by sending the settings file in desired format to erpc-protection@gov.in.

On enquiry from ERLDC regarding facility in PDMS to review the settings implemented in the relay, PRDC representative replied that settings can be extracted from PDMS and analysis/review of same can be done by simulation tool of PSCT.

It was decided that the substation-wise review of protection settings may be carried out using PDMS & PSCT for that PRDC was advised to make a presentation in this regard in PCC.

In 125th PCC Meeting, It was decided that PRDC would made a presentation in next PCC meeting on protection setting coordination using PSCT & PDMS.

PRDC may update.

ITEM NO. C.5: Follow-up of Decisions of the Previous Protection Sub-Committee Meeting(s)

The decisions of previous PCC meetings are attached at **Annexure C.5.**

Members may update the latest status.

.

******

ग्रिड-इंडिया GRID-INDIA
ग्रिड कंट्रोलर ऑफ इंडिया लिमिटेड
(भारत सरकार का उद्यम)
GRID CONTROLLER OF INDIA LIMITED
(A Government of India Enterprise)
[formerly Power System Operation Corporation Limited (POSOCO)]
पूर्वी क्षेत्रीय भार प्रेषण केन्द्र / Eastern Regional Load Despatch Centre
कार्यालय : 14, गोल्फ क्लब रोड, टालिगंज, कोलकाता - 700033
Office : 14, Golf Club Road, Tollygunge, Kolkata - 700033
CIN : U40105DL2009GOI188682, Website : www.erldc.in, E-mail : erldcinfo@grid-india.in, Tel.: 033 23890060/0061

घटना संख्या: **27-04-2023/1** दिनांक: **08-05-2023**

Report on the grid event in Eastern Region (पूर्वी क्षेत्र में ग्रिड घटना पर रिपोर्ट)

Summary of the event (घटना का सारांश):

At 07:12 Hrs, 220 kV Bus PT at Chandil burst leading to tripping of all elements connected to 220 kV Bus at Chandil as bus bar protection is not available. This led to completer power failure at Chandil S/s and load loss of around 250 MW occurred at Rajkhasrawan, Chakradharpur, Jadugoda, Dalbhumgarh, Golmuri, Kendposi, Tamar, Khunti, Adityapur.

- **Date / Time of disturbance:** 27-04-2023 at 07:12 hrs
- **Event type:** GD-1
- **Systems/ Subsystems affected:** 220/132 kV Chandil S/s
- **Load and Generation loss**.
  - No generation loss was reported during the event.
  - Around 250 MW load loss reported during the event at Rajkhasrawan, Chakradharpur, Jadugoda, Dalbhumgarh, Golmuri, Kendposi, Tamar, Khunti, Adityapur by Jharkhand SLDC.

Important Transmission Line/element if out (महत्वपूर्ण संचरण लाइने जो बंद है):

- NIL

Major elements tripped (प्रमुख ट्रिपिंग):

- 220 kV Ranchi-Chandil
- 220 kV Ramchandrapur-Chandil
- 220 kV Chandil-Santaldih
- 220/132 kV ICT-2 & 3 at Ramchandrapur
- 132 kV Chandil-Adityapur

Network across the affected area (प्रभावित क्षेत्र का नक्शा)

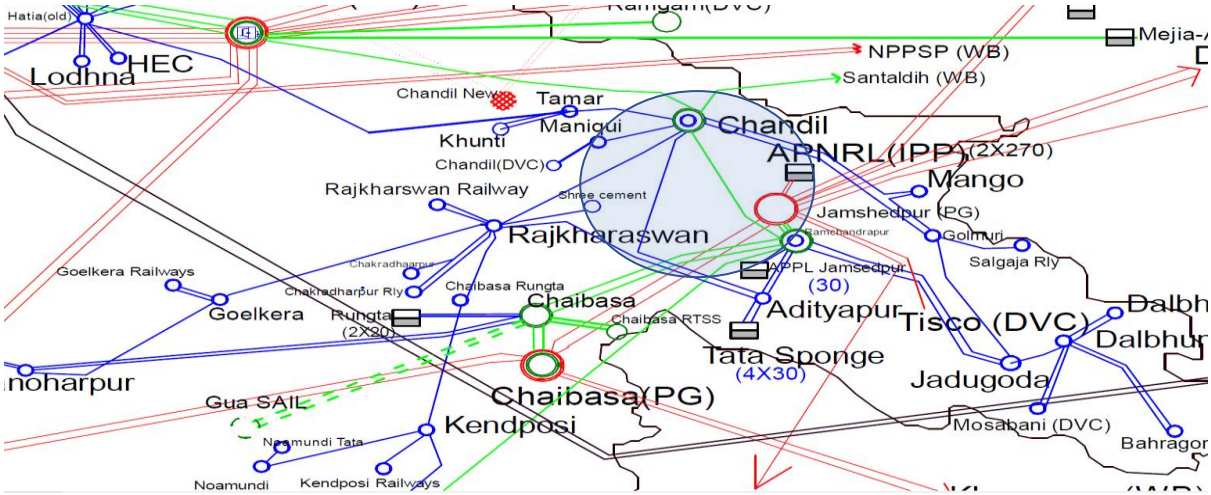

Figure 1: Network across the affected area

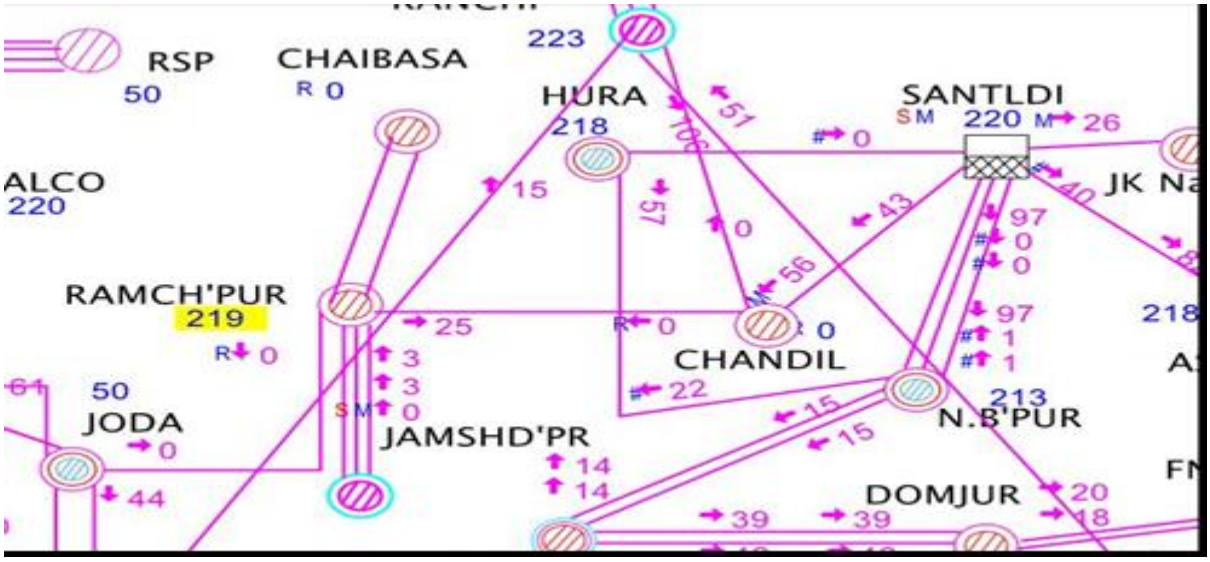

Figure 2: SCADA snapshot of the affected area

Relay indication and PMU observation (रिले संकेत और पीएमयू पर्यवेक्षण):

समय	नाम	उप केंद्र 1 रिले संकेत	उप केंद्र 2 रिले संकेत	पीएमयू पर्यवेक्षण
07:12	220 kV Ranchi-Chandil	Ranchi: Didn't trip	Chandil: R_Y_B, Zone-4, Ir:2.72 kA, Iy:2.93 kA, Ib: 2.78 kA	Around 30 kV dip in all three-phase voltage at Jamshedpur. Total fault clearance time: 1400 msec
	220 kV Ramchandrapur-Chandil	Ramchandrapur: Didn't trip	Chandil: R_Y_B, Zone-4, Ir:2.72 kA, Iy:2.93 kA, Ib: 2.78 kA	
	220 kV Santaldih-Chandil	Santaldih: Didn't trip	Chandil: R_Y_B, Zone-4, Ir:2.72 kA, Iy:2.93 kA, Ib: 2.78 kA	
	220/132 kV ICT-2 & 3 at Ramchandrapur	Tripped on O/c		
	132 kV Chandil-Adityapur	Chandil: Didn't trip	Adityapur: R_Y_B, Zone-3, 33.9 km, Ir: 1.64 kA, Iy: 1.70 kA, Ib: 1.64 kA	

Figure 2: PMU snapshot of 400/220 kV Jamshedpur S/s

Restoration (पूर्वावस्था की प्रप्ति)

Transmission/Generation element name	Restoration time
220 kV Ranchi-Chandil	07:58
220 kV Ramchandrapur-Chandil	07:33
220 kV Santaldih-Chandil	07:54

Analysis of the event (घटना का विश्लेषण) & Protection issue (सुरक्षा समस्या):

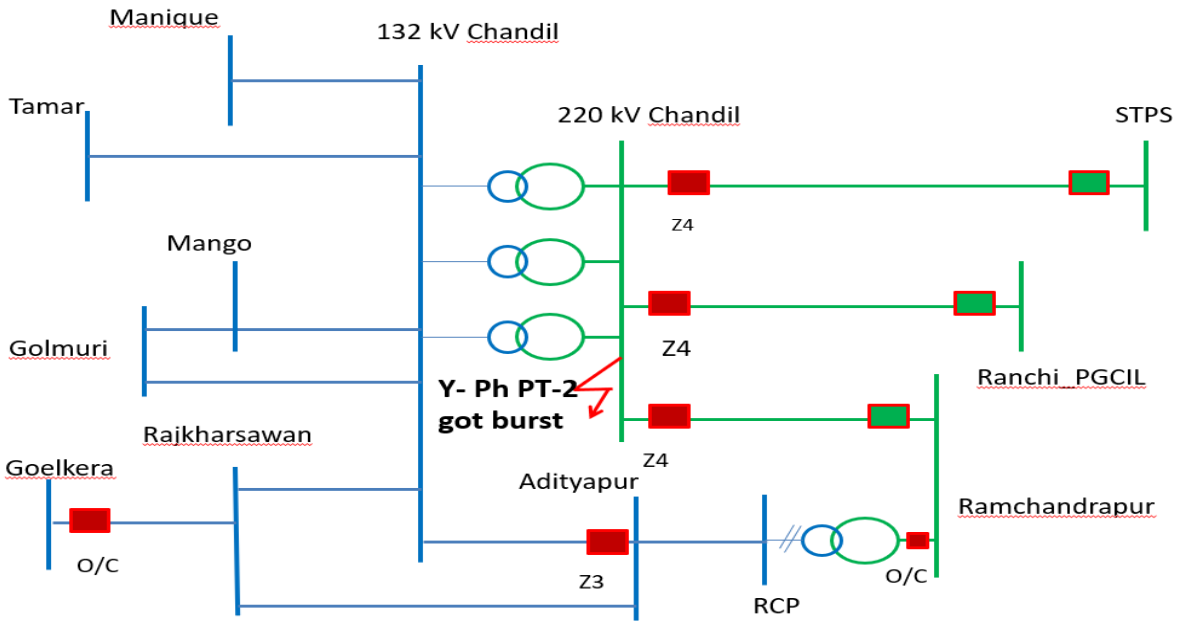

Fig 4: Schematic Network diagram and tripping (prepared by JUSNL)

At 07:12 Hrs, Y_ph PT of 220 kV Bus-2 at Chandil burst and three phase fault occurred.
Sequence of events:

- 132 kV Goelkera-Rajkharsawan tripped on O/c after 120 msec. O/c settings were later revised by JUSNL.
- All three 220 kV feeders at Chandil tripped in Zone-4 after 250 msec from Chandil. Lines remained charged from remote end.
- 220/132 kV ICTs at Chandil did not trip and fault continued to be fed through 132 kV with Ramchandapur acting as source. LV side O/c settings to be reviewed. **JUSNL may update.**
- 132 kV Adityapur-Chandil tripped from Adityapur end in Zone-3 after 900 msec. Time co-ordination may be done to avoid tripping of 132 kV lines during fault in 220 kV lines. **JUSNL may update.**
- After 1400 msec, 220/132 kV ICT-2&3 at Ramchandrapur tripped on O/c and fault was isolated. O/c settings may be reviewed at Ramchndrapur also. **JUSNL may update.**
- It has been observed that Back Up O/c setting of 220/132 kV ICTs in JUSNL system are not implemented in a co-ordinated manner. Earlier also, many cases of ICT tripping were observed due to incorrect setting. JUSNL is requested to study their entire system and set up O/c setting of ICTs at all S/s duly considering fault level of respective S/s.
- Report submitted by JUSNL is attached at Annexure-3.

Non-compliance observed (विनियमन का गैर-अनुपालन):

Issues	Regulation Non-Compliance	Utility
DR/EL not provided within 24 Hours	1. IEGC 5.2 (r) 2. CEA grid Standard 15.3	**JUSNL**

Status of Reporting (रिपोर्टिंग की स्थिति):

- DR/EL received from JUSNL.

Annexure 1: Sequence of events recorded at ERLDC SCADA data at the time of the event

Sequence of Events not recorded at the time of event.

Annexure 2: DR recorded

DR of 220 kV Ramchandrapur-Chandil (Chandil)

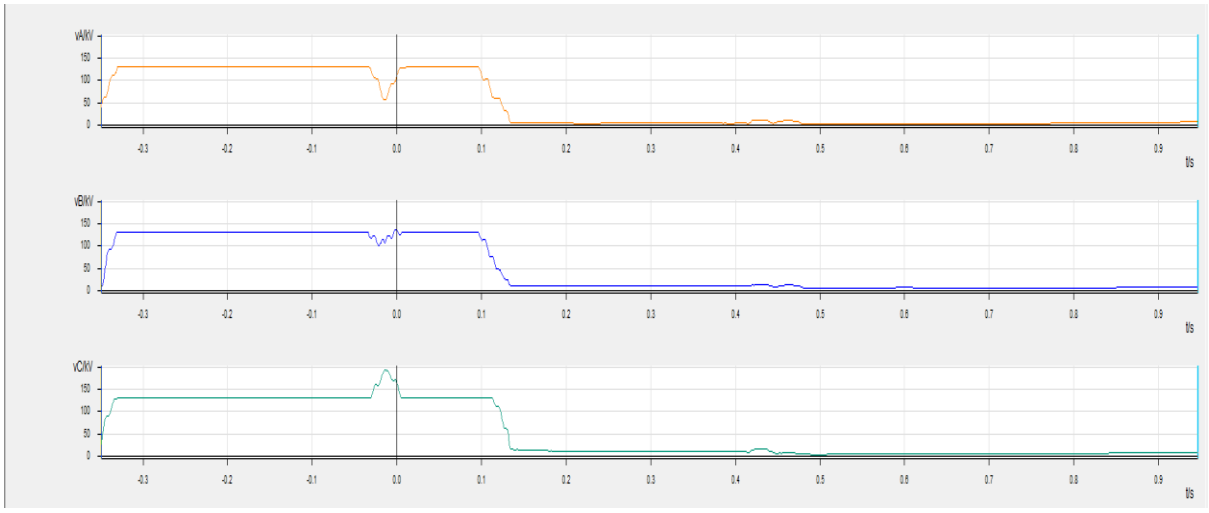

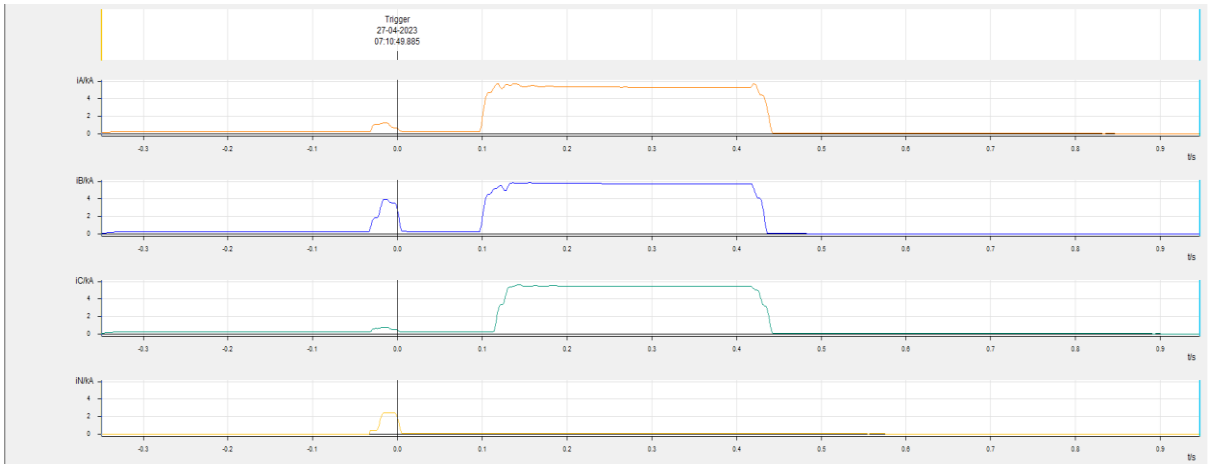

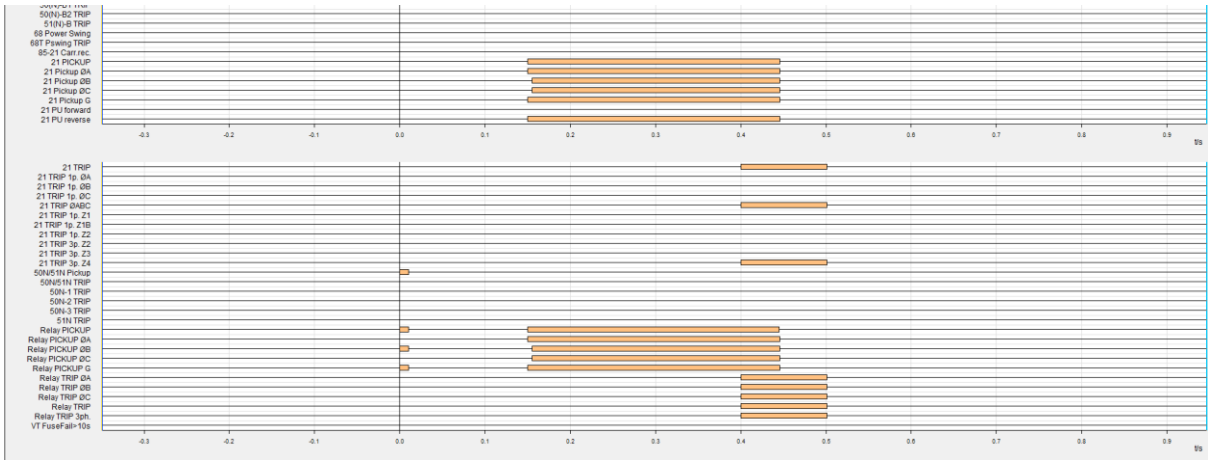

DR of 220 kV Santaldih-Chandil (Chandil)

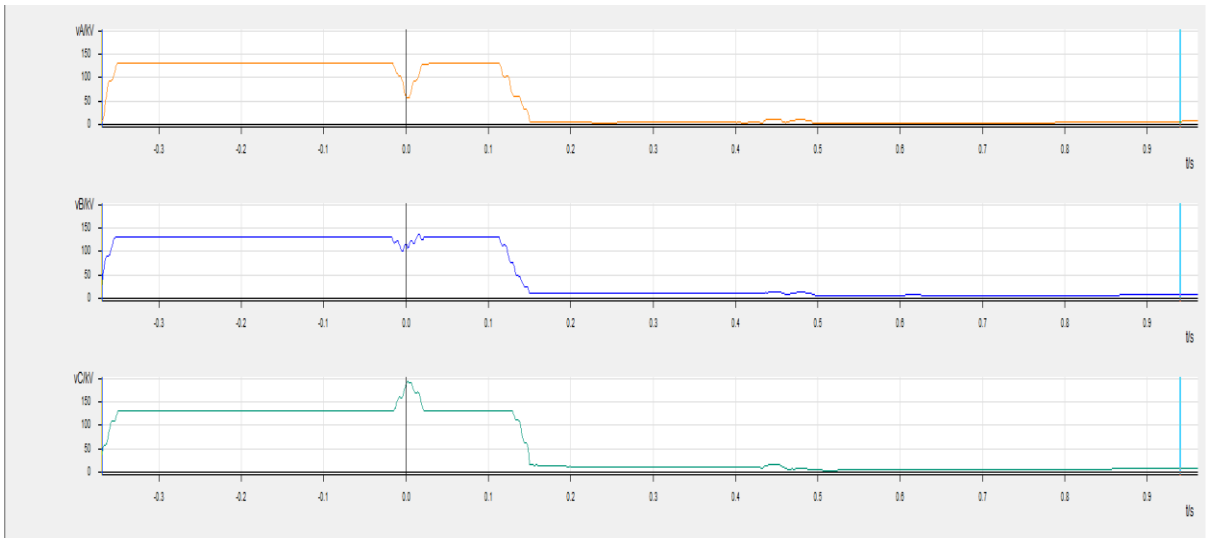

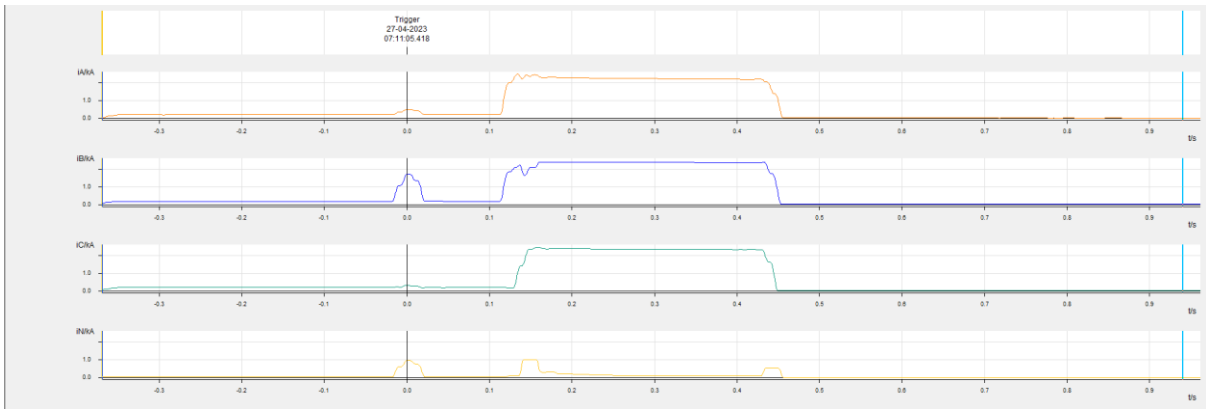

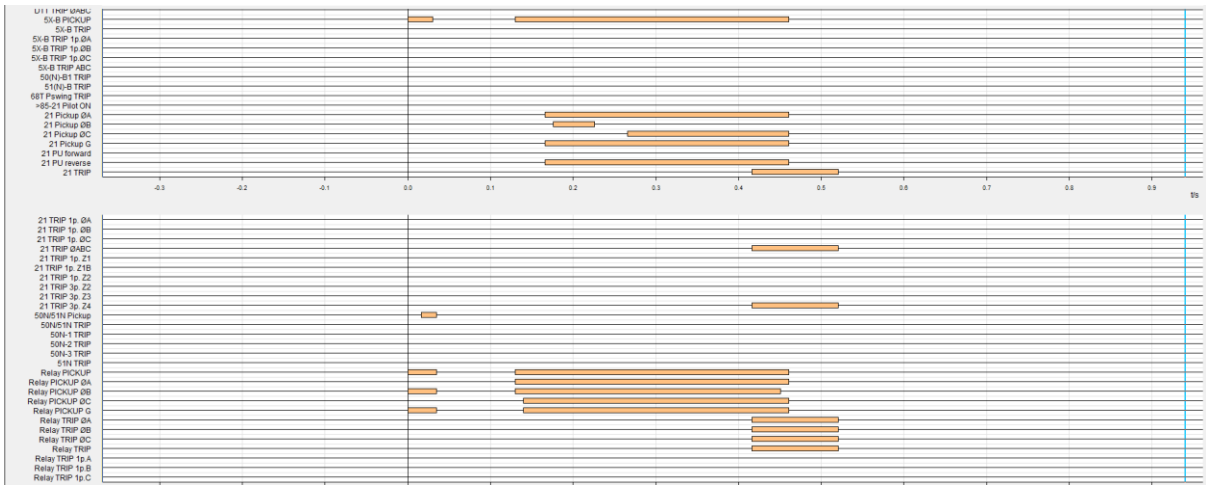

DR of 220 kV Ranchi-Chandil (Chandil)

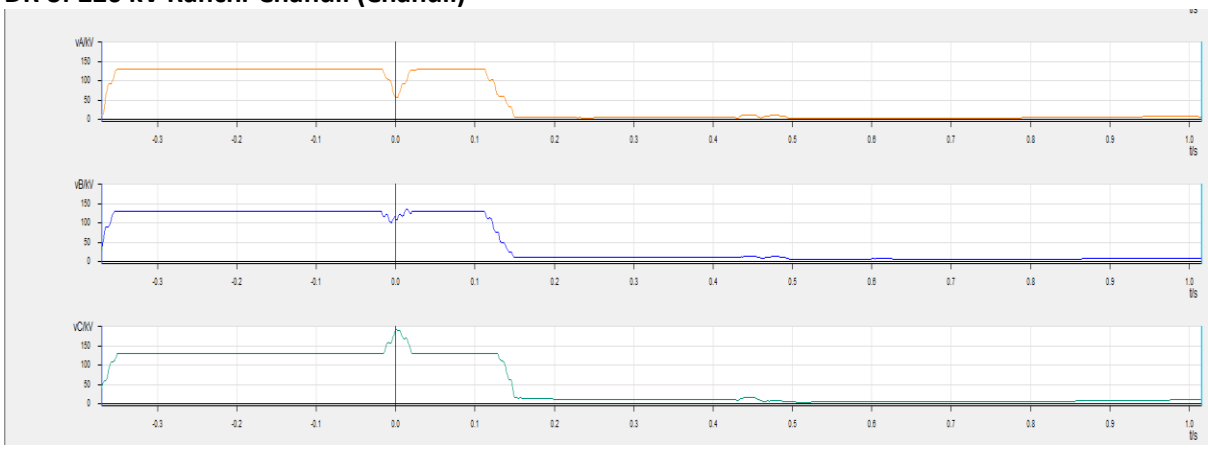

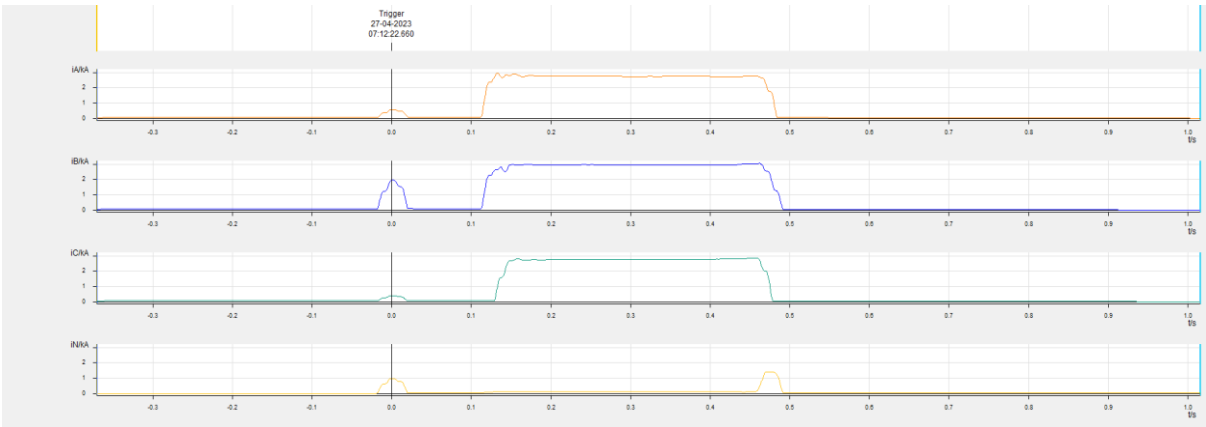

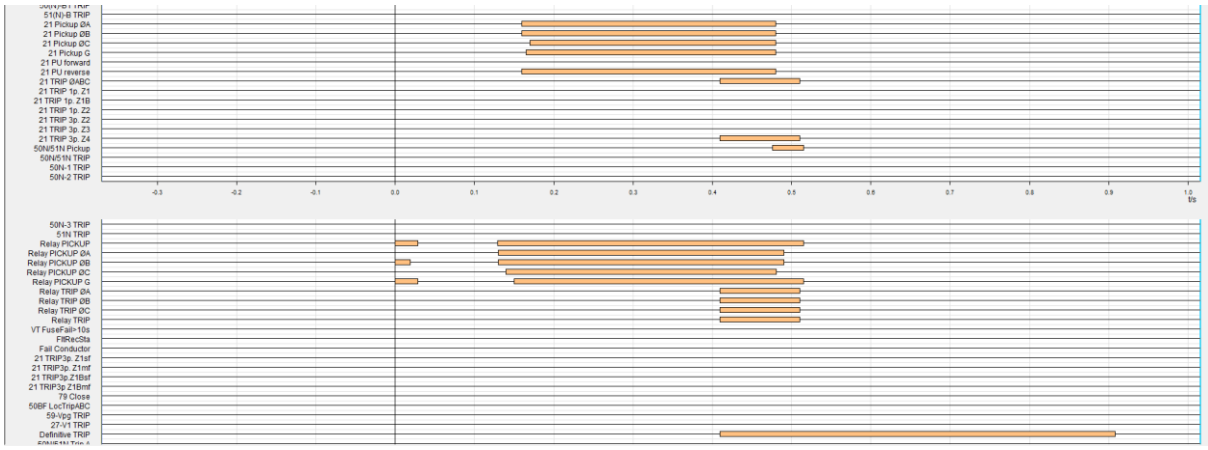

Annexure-3

GRID DISTURBANCE AT 220/132 kV CHANDIL GSS ON 27.04.2023 at 07:12 hrs

Disturbance at Chandil GSS

- **Overview of Incident :-**

At 07:12 hrs, Y-Phase, 220 kV PT-2 was got burst due to which all the 220 kV line feeders tripped on Z4 (tz=0.250 s) from Chandil end resulting TPF at Chandil GSS.

Load loss: 192 MW

Wheather Condition- Normal

Elements tripped during the event:-

- 220 kV Chandil – Ramchndrapur s/c
- 220 kV Chandil – STPS s/c
- 220 kV Chandil – Ranchi(PG) s/c
- 132 kV Chandil – Adityapur s/c tripped from Adityapur end.

Elements under outage:- None

➢ Pre-fault conditions :-

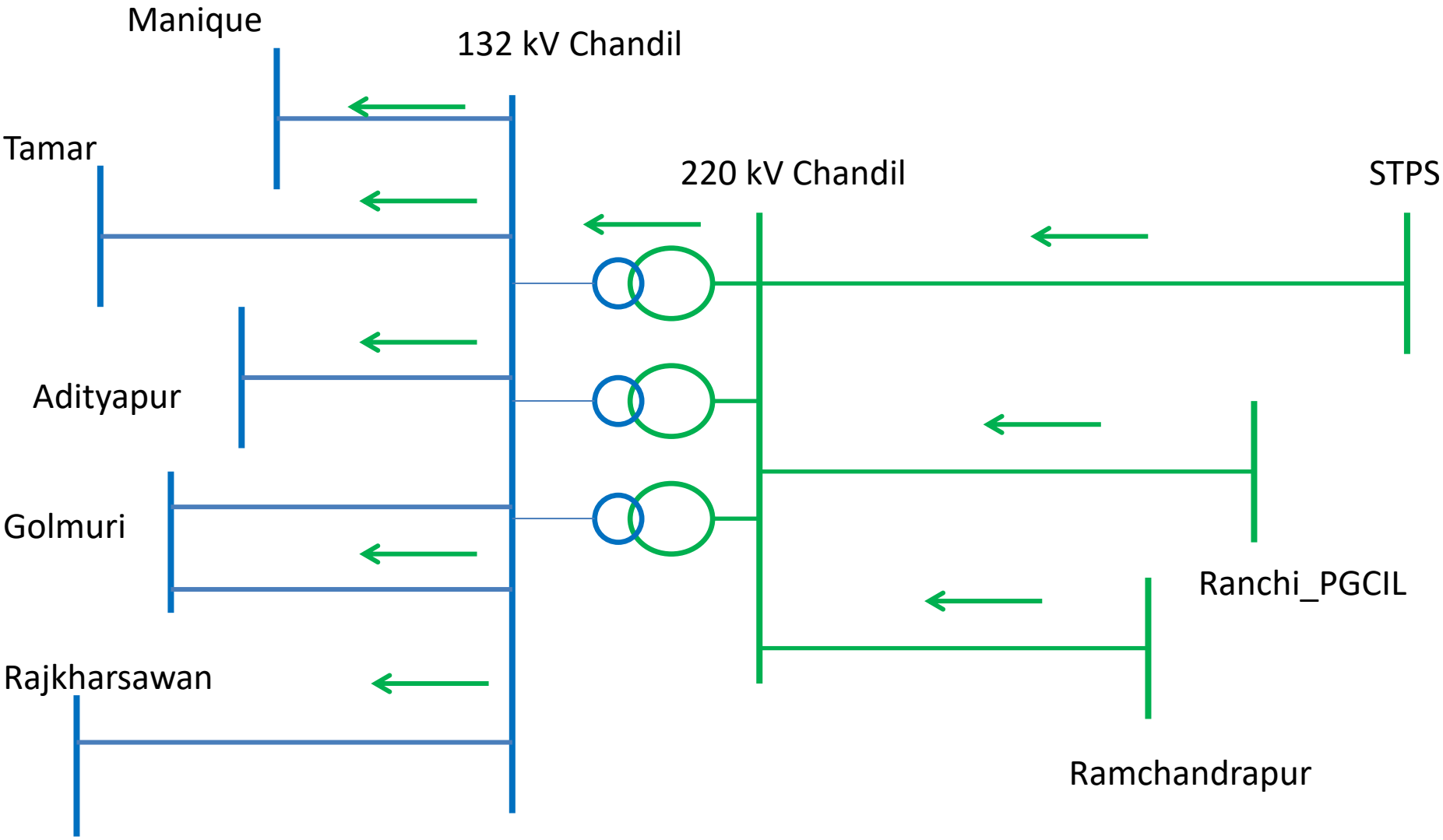

➢ Fault conditions :-

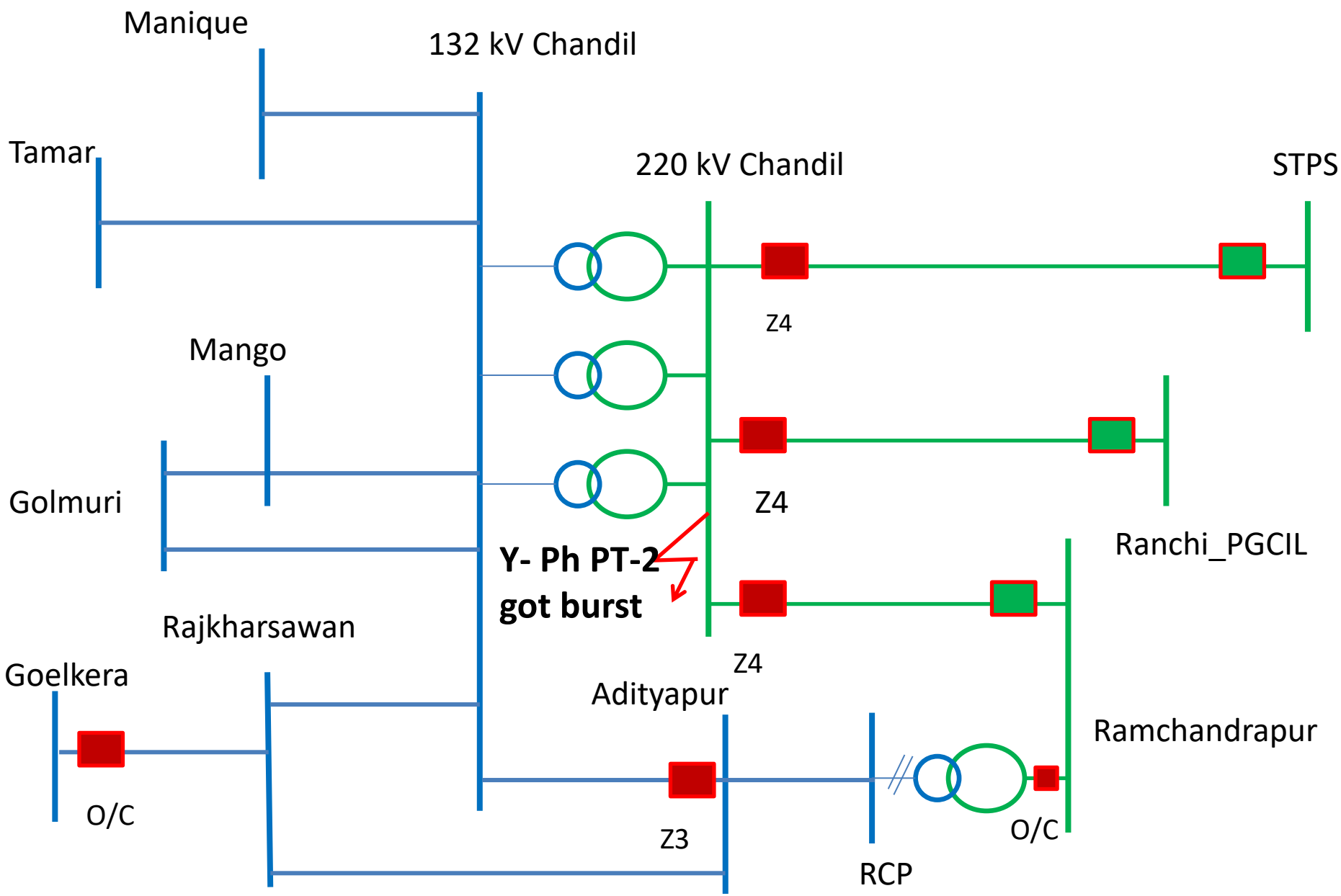

- **Relay Indications:-**

Element's Name	Relay End-1	Relay End-2	Remarks
220 kV Chandil - RCP	Z4, Ir- 5.28 kA, Iy- 5.66 kA, Ib- 5.50 kA	Didn't Trip Z2 Pick up	All 220 kV lines were tripped within 350 ms at Chandil. tZ4 = 0.250 s
220 kV Chandil - STPS	Z4, Ir- 2.17 kA, Iy- 2.31kA, Ib- 2.32 kA		
220 kV Chandil – Ranchi_PG	Z4, Ir- 2.72 kA, Iy- 2.93 kA, Ib- 2.78 kA		
150 MVA ICT-II (at RCP)	**HV Side -** O/C, Ir-1.21 kA, Iy-1.31 kA, Ib- 1.26 kA		fault cleared in 1350 ms
150 MVA ICT-III (at RCP)	O/C (Electromechanical relay)		
132 kV Chandil - Adityapur	Didn't Trip	Z3, 33.9 km, Ir- 1.64 kA, Iy- 1.70 kA, Ib- 1.64 KA	Fault cleared in 900 ms.
132 kV Goelkera - Rajkharsawan	**High set O/C** (tripped on 124 ms), Ir- 0.63 kA, Iy- 0.63 kA, Ib- 0.64 kA	Didn't Trip	Improper O/C setting at Goelkera

- **Tripping Analysis :-**

❖ Due to bursting of Y-Phase, 220 kV PT-2, Y-ph to ground bus fault created. After 100 ms it got converted to 3ph bus fault which sensed by all the 220 kV line feeders and tripped on Z4 within 350 ms (tZ4=0.250 s) from Chandil end.

❖ O/C pick up was observed in all ICTs but none of the ICTs (3x100 MVA) tripped during the event at Chandil.

❖ **132 kV Chandil – Adityapur s/c** tripped on Z3 from Adityapur end (Fault cleared in approx. 900 ms).

❖ **132 kV Chandil – Rajkharsawan s/c** also didn't tripped (distance relay picked up).

❖ After tripping of 220 kV line feeders and 132 kV Chandil – Adityapur s/c, **132 kV Chandil – Rajkharsawan s/c** was only source for feeding the fault via 132 kV Rajkharsawan – Adityapur, 132 kV Adityapur – Ramchandrapur d/c.

❖ After tripping of both **150 MVA, 220/132 kV ICT- II & III** on O/C fault got cleared.

Tripping Analysis :-

- **150 MVA, 220/132 kV ICT- II & III** tripped on O/C at Ramchandrapur due to shifting fault and load of Jamshedpur region on these ICTs (tripped in approx. 1250 ms).

Protection Issue observed during the event:-

- None of the ICTs (3x100 MVA) tripped during the event, seems there is relay co-ordination issue. High O/C set not operated due to low fault current.

- **Remedial Measures:-**

After isolating faulted PT all the elements are normalized.

- **Restoration of elements:-**

Sl. No.	Element's Name	Restoration Time
1	220 kV Chandil - Ramchandrapur	07:33 hrs
2	220 kV Chandil - STPS	07:54 hrs
3	220 kV Chandil – Ranchi_PG	07:58 hrs
4	132 kV Chandil - Adityapur	07:56 hrs
5	132 kV Chandil - Rajkharsawan	07:42 hrs
6	132 kV Chandil - Manique	07:38 hrs
7	132 kV Chandil - Tamar	07:57 hrs
8	132 kV Chandil - Mango	07:44 hrs

Failed PT Details:-

Make- SCT Ltd , Mfd. Year – 2012

PT Insulation Resistance Test Report

Name of GSS: 220/132kv Chandil-1

Name of Bay: 220kv PT-2

Date: 28.03.2023

Insulation Resistance in MΩ:

Cores	R	Y	B
Core-1 to Core-2	1000	500	600
Core-1 to Core-3	900	500	600
Core-2 to Core-3	1100	600	800
Core-1 to Earth	1500	650	700
Core-2 to Earth	1000	400	600
Core-3 to Earth	1000	500	500
Primary to Core-1	1100	500	500
Primary to Core-2	900	400	500
Primary to Core-3	1000	500	600
Primary to Earth	450	400	400

28.03.2023

MANAGER

TRANSMISSION SUB-DIVISION

CHANDIL-I

Thank You

Annexure B.1.2

GRID DISTURBANCE AT 220/132 kV CHANDIL GSS ON 27.04.2023 at 07:12 hrs

Disturbance at Chandil GSS

- **Overview of Incident :-**

At 07:12 hrs, Y-Phase, 220 kV PT-2 was got burst due to which all the 220 kV line feeders tripped on Z4 (tz=0.250 s) from Chandil end resulting TPF at Chandil GSS.

Load loss: 192 MW

Wheather Condition- Normal

Elements tripped during the event:-

- 220 kV Chandil – Ramchndrapur s/c
- 220 kV Chandil – STPS s/c
- 220 kV Chandil – Ranchi(PG) s/c
- 132 kV Chandil – Adityapur s/c tripped from Adityapur end.

Elements under outage:- None

➢ Pre-fault conditions :-

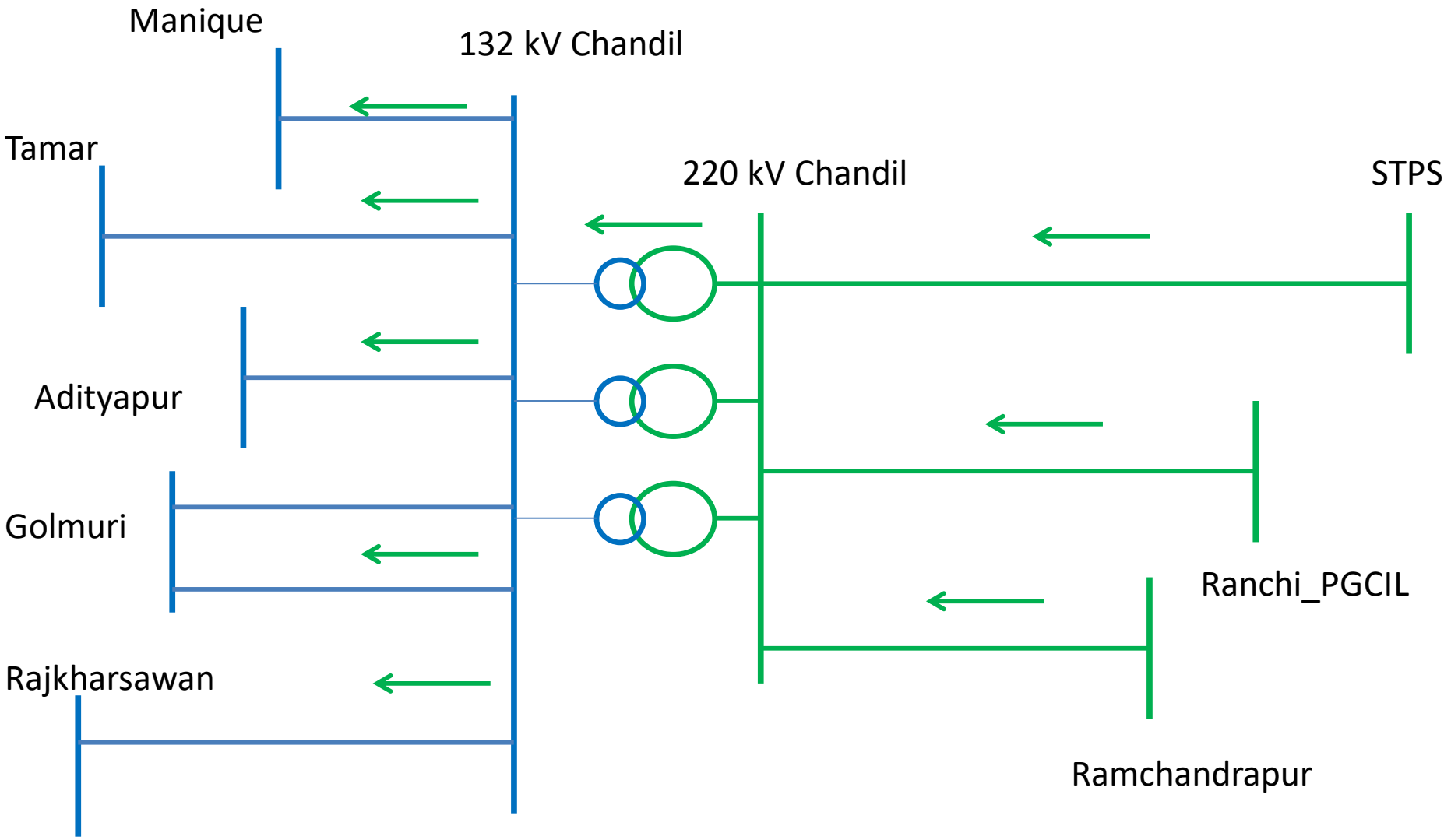

➢ Fault conditions :-

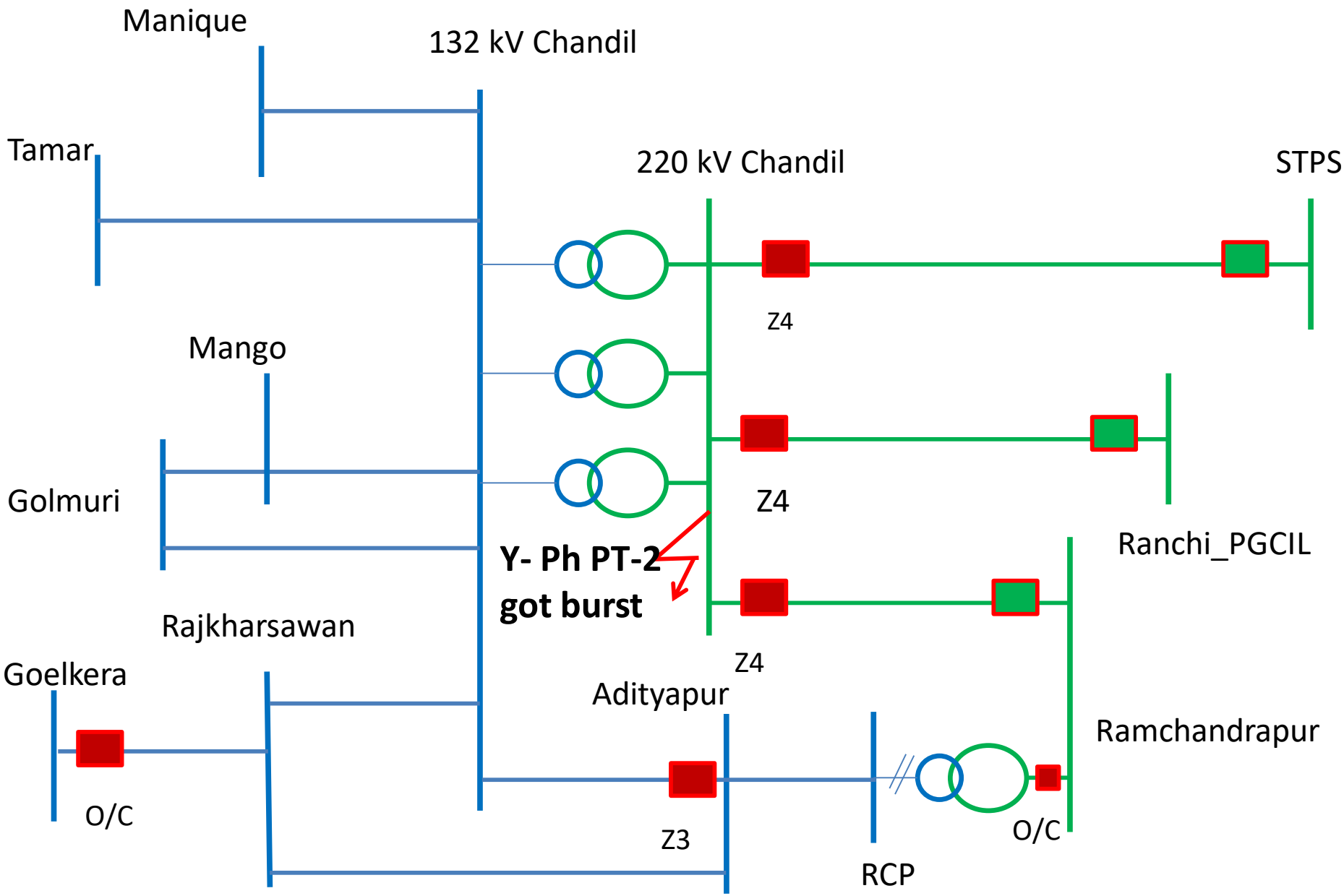

- **Relay Indications:-**

Element's Name	Relay End-1	Relay End-2	Remarks
220 kV Chandil - RCP	Z4, Ir- 5.28 kA, Iy- 5.66 kA, Ib- 5.50 kA	Didn't Trip Z2 Pick up	All 220 kV lines were tripped within 350 ms at Chandil. tZ4 = 0.250 s
220 kV Chandil - STPS	Z4, Ir- 2.17 kA, Iy- 2.31kA, Ib- 2.32 kA		
220 kV Chandil – Ranchi_PG	Z4, Ir- 2.72 kA, Iy- 2.93 kA, Ib- 2.78 kA		
150 MVA ICT-II (at RCP)	**HV Side -** O/C, Ir-1.21 kA, Iy-1.31 kA, Ib- 1.26 kA		fault cleared in 1350 ms
150 MVA ICT-III (at RCP)	O/C (Electromechanical relay)		
132 kV Chandil - Adityapur	Didn't Trip	Z3, 33.9 km, Ir- 1.64 kA, Iy- 1.70 kA, Ib- 1.64 KA	Fault cleared in 900 ms.
132 kV Goelkera - Rajkharsawan	**High set O/C** (tripped on 124 ms), Ir- 0.63 kA, Iy- 0.63 kA, Ib- 0.64 kA	Didn't Trip	Improper O/C setting at Goelkera

- **Tripping Analysis :-**

❖ Due to bursting of Y-Phase, 220 kV PT-2, Y-ph to ground bus fault created. After 100 ms it got converted to 3ph bus fault which sensed by all the 220 kV line feeders and tripped on Z4 within 350 ms (tZ4=0.250 s) from Chandil end.

❖ O/C pick up was observed in all ICTs but none of the ICTs (3x100 MVA) tripped during the event at Chandil.

❖ **132 kV Chandil – Adityapur s/c** tripped on Z3 from Adityapur end (Fault cleared in approx. 900 ms).

❖ **132 kV Chandil – Rajkharsawan s/c** also didn't tripped (distance relay picked up).

❖ After tripping of 220 kV line feeders and 132 kV Chandil – Adityapur s/c, **132 kV Chandil – Rajkharsawan s/c** was only source for feeding the fault via 132 kV Rajkharsawan – Adityapur, 132 kV Adityapur – Ramchandrapur d/c.

❖ After tripping of both **150 MVA, 220/132 kV ICT- II & III** on O/C fault got cleared.

Tripping Analysis :-

- **150 MVA, 220/132 kV ICT- II & III** tripped on O/C at Ramchandrapur due to shifting fault and load of Jamshedpur region on these ICTs (tripped in approx. 1250 ms).

Protection Issue observed during the event:-

- None of the ICTs (3x100 MVA) tripped during the event, seems there is relay co-ordination issue. High O/C set not operated due to low fault current.

- **Remedial Measures:-**

After isolating faulted PT all the elements are normalized.

- **Restoration of elements:-**

Sl. No.	Element's Name	Restoration Time
1	220 kV Chandil - Ramchandrapur	07:33 hrs
2	220 kV Chandil - STPS	07:54 hrs
3	220 kV Chandil – Ranchi_PG	07:58 hrs
4	132 kV Chandil - Adityapur	07:56 hrs
5	132 kV Chandil - Rajkharsawan	07:42 hrs
6	132 kV Chandil - Manique	07:38 hrs
7	132 kV Chandil - Tamar	07:57 hrs
8	132 kV Chandil - Mango	07:44 hrs

Failed PT Details:-

Make- SCT Ltd , Mfd. Year – 2012

PT Insulation Resistance Test Report

Name of GSS: 220/132kv Chandil-1

Name of Bay: 220kv PT-2

Date: 28.03.2023

Insulation Resistance in MΩ:

Cores	R	Y	B
Core-1 to Core-2	1000	500	600
Core-1 to Core-3	900	500	600
Core-2 to Core-3	1100	600	800
Core-1 to Earth	1500	650	700
Core-2 to Earth	1000	400	600
Core-3 to Earth	1000	500	500
Primary to Core-1	1100	500	500
Primary to Core-2	900	400	500
Primary to Core-3	1000	500	600
Primary to Earth	450	400	400

28.03.2023

MANAGER

TRANSMISSION SUB-DIVISION

CHANDIL-I

Thank You

पावर सिस्टम ऑपरेशन करपोरेशन लिमिटेड
(भारत सरकार का उद्यम)
POWER SYSTEM OPERATION CORPORATION LIMITED
(A Government of India Enterprise)
Eastern Regional Load Despatch Centre: 14, Golf Club Road, Tollygunge, Kolkata-700 033.
CIN: U40105DL2009GOI188682
फ़ोन: 033- 24235755, 24174049 फैक्स : 033-24235809/5029 Website:www.erldc.org, Email ID- erldc@posoco.in

घटना संख्या: **18-04-2023/1** दिनांक: **11-05-2023**

Report on the grid event in Eastern Region (पूर्वी क्षेत्र में ग्रिड घटना पर रिपोर्ट)

1. Summary of the event (घटना का सारांश):

At 13:19 Hrs, B_ph CT of 220 kV Tenughat-Govindpur-2 burst at Tenughat. At the same time, both running units at Tenughat also tripped. Around 305 MW generation loss occurred at Tenughat.

- **Date / Time of disturbance:** 18-04-2023 at 13:19 hrs.
- **Event type:** GI - 1
- **Systems/ Subsystems affected:** 220 kV Tenughat (TVNL) S/s
- **Load and Generation loss**.
  - 305 MW generation loss reported during the event.
  - No load loss occurred during the event

2. Important Transmission Line/element if out (महत्वपूर्ण संचरण लाइने जो बंद है):

- NIL

3. Major elements tripped (प्रमुख ट्रिपिंग)

- 220 kV Tenughat-Govindpur-D/c
- U#1 & U#2 at Tenughat

4. Network across the affected area (प्रभावित क्षेत्र का नक्शा)

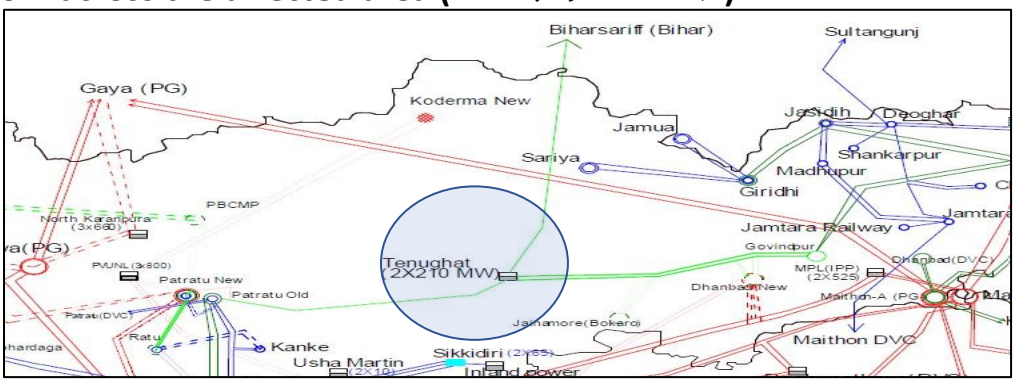

Figure 1: Network across the affected area

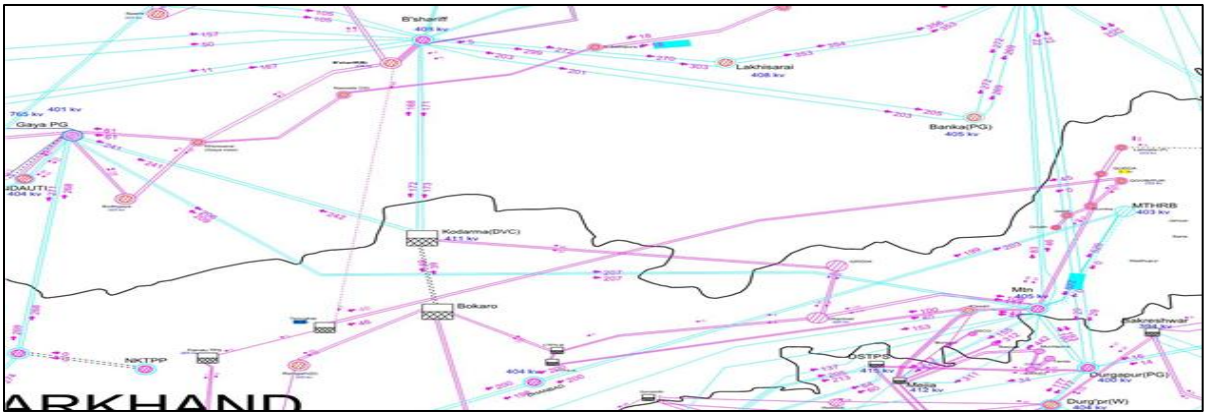

Figure 2: SCADA snapshot for of the system

Relay indication and PMU observation (रिले संकेत और पीएमयू पर्यवेक्षण):

समय	नाम	उप केंद्र 1 रिले संकेत	उप केंद्र 2 रिले संकेत	पीएमयू पर्यवेक्षण
13:19	220 kV Tenughat-Govindpur-1	Tenughat: R_N, Zone-1, 8 kA		B phase fault first led to R phase fault .
	220 kV Tenughat-Govindpur-2	Tenughat: B_N, Zone-1, 10 kA		
	Tenughat U#1 & U#2	O/C Highset		

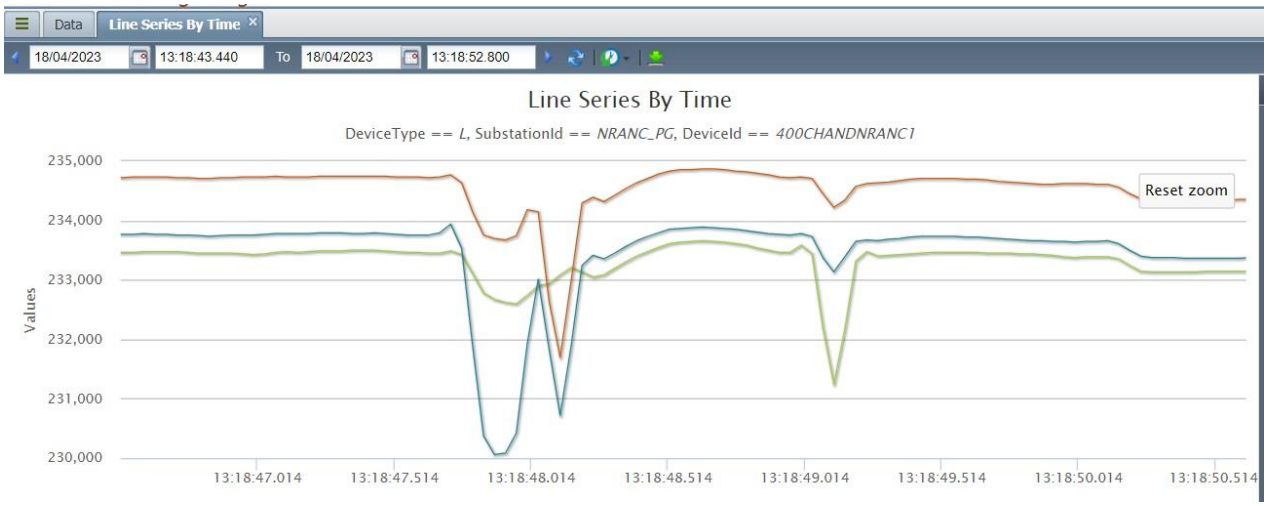

5. Restoration (पूर्वावस्था की प्रप्ति)

Transmission/Generation element name	Restoration time
220 kV Tenughat-Govindpur-1	17;59
220 kV Tenughat-Govindpur-2	17;19
Tenughat U#1	14:30
Tenughat U#2	14:15

6. Analysis of the event (घटना का विश्लेषण):

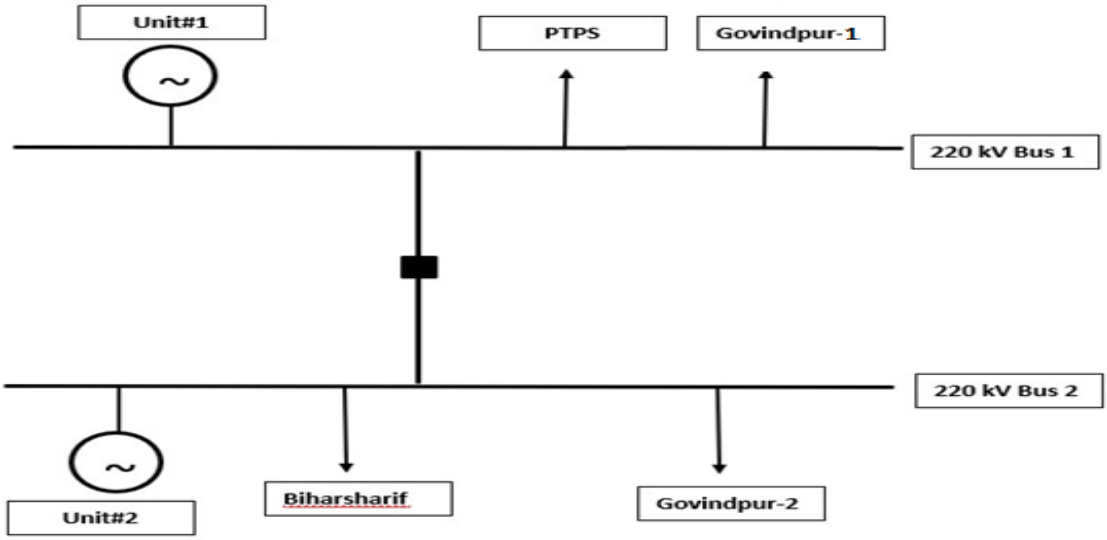

220 kV Bus arrangement at Tenughat

DR Analysis

- B phase line side CT of Tenughat-Govindpur-II blasted at tenughat end ,Fault was sensed in Zone-1 from tenughat end and line tripped within 100 ms.
- CT blast created heavy fire and smoke which created fault in Govindpur-I in R phase which also tripped in zone-1 from Tenughat end.
- 220 kV Tenughat-Patratu and 220 kV Tenughat-Biharsharif did not tripped but ,zone-4 should have been picked ,which should be checked and confirmed by tenughat to ensure proper protection functioning .**Tenughat to confirm.**
- At the same time Unit -2 tripped in GT High set O/C , which should not occur . Relay is electro mechanical in nature **JUSNL to look into this .**
- 210 MW U#1 Tenughat also tripped. Reason is not clear **and Tenughat should confirm** the reason. But it is not desired for any of the unit to trip for such transient fault which got cleared within 100ms .

7. Protection issue (सुरक्षा समस्या):

- U#2 tripped immediately within 80 msec. **O/c Hi-set setting to be checked and kept in such a way that it should not trip for a close line fault which is getting cleared within z-1 time. If possible it was advised to disable settings maybe reviewed.**
- Unit -**2 relays are electromechanical so DR is not available. It should be replaced with Numerical.**

8. Recommendations (सुझाव):

- Installation of Numerical bus bar protection scheme may be explored at the earliest as same kind of fault is causing complete outage of S/s.
- U#2 of Tenughat has electromechanical relay. Numerical relay maybe installed for the unit to ensure security and reliability in line with CEA standard.
- DR channels should be configured properly as per DR standards ratified in PCC and these DRs should be time synchronised.

9. Non-compliance observed (विनियमन का गैर-अनुपालन):

Issues	Regulation Non-Compliance	Utility
DR/EL not provided within 24 Hours	1. IEGC 5.2 (r) 2. CEA grid Standard 15.3	**JUSNL, TVNL**

10. Status of Reporting (रिपोर्टिंग की स्थिति):

- Complete DR/EL yet to be received from TVNL, JUSNL.

Annexure 1: Sequence of events recorded at ERLDC SCADA data at the time of the event.

Sequence of event not recorded at time of event.

Annexure 2: DR recorded

DR OF TENUGHAT-GOVINDPUR -1

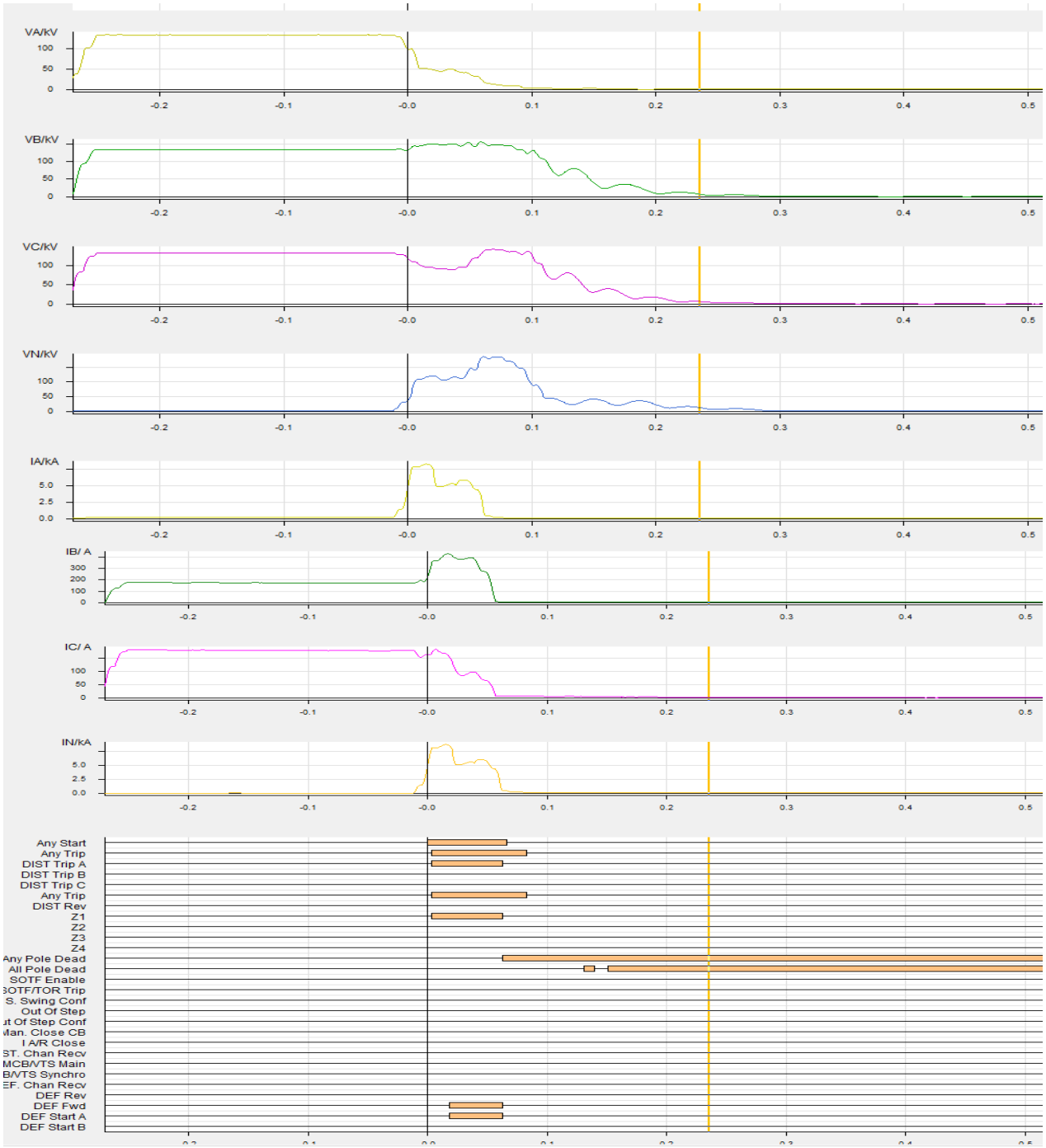

ग्रिड-इंडिया GRID-INDIA
ग्रिड कंट्रोलर ऑफ इंडिया लिमिटेड
(भारत सरकार का उद्यम)
GRID CONTROLLER OF INDIA LIMITED
(A Government of India Enterprise)
[formerly Power System Operation Corporation Limited (POSOCO)]
पूर्वी क्षेत्रीय भार प्रेषण केन्द्र / Eastern Regional Load Despatch Centre
कार्यालय : 14, गोल्फ क्लब रोड, टालिगंज, कोलकाता - 700033
Office : 14, Golf Club Road, Tollygunge, Kolkata - 700033
CIN : U40105DL2009GOI188682, Website : www.erldc.in, E-mail : erldcinfo@grid-india.in, Tel.: 033 23890060/0061

दिनांक: **08-05-2023**

Report on the grid event in Eastern Region (पूर्वी क्षेत्र में ग्रिड घटना पर रिपोर्ट)

Summary of the events (घटना का सारांश):

Event 1:

At 21:33 Hrs on 17.04.2023, 400 kV Rangpo-Dikchu tripped due to B_N Fault leading to tripping of all running units at Teesta 3 and Dikchu due to loss of evacuation path as 400 kV Teesta 3-Rangpo already tripped at 20:53 Hrs due to Y_B_N fault. Around 1234 MW generation loss occurred (Teesta 3:1187 MW, Dikchu: 47 MW).

- **Date / Time of disturbance:** 17-04-2023 at 21:33 hrs.
- **Event type:** GD - 1
- **Systems/ Subsystems affected:** 400 kV Teesta 3, 400 kV Dikchu S/s
- **Load and Generation loss**.
  - 1234 MW generation loss reported during the event.
  - No load loss occurred during the event.

Important Transmission Line/element if out (महत्वपूर्ण संचरण लाइने जो बंद है):

- 400 kV Teesta 3-Rangpo

Major elements tripped (प्रमुख ट्रिपिंग)

- 400 kV Teesta 3-Dikchu
- 400 kV Rangpo-Dikchu

Relay indication and PMU observation (रिले संकेत और पीएमयू पर्यवेक्षण):

समय	नाम	उप केंद्र 1 रिले संकेत	उप केंद्र 2 रिले संकेत	पीएमयू पर्यवेक्षण
20:53	400 kV Teesta 3-Rangpo	Teesta 3: Y_B, 20.9 km, Iy: 6.5 kA, Ib: 5.7 kA	Rangpo: Y_B, 32.41 km, Iy:6.679 kA, Ib: 7.416 kA	66 kV dip in Y_ph and 71 kV dip in B_ph voltage at Rangpo. Fault clearance time: 100 msec
21:33	400 kV Teesta 3-Dikchu	Teesta 3: Tripped on O/V	Dikchu: DT received	Fault clearance time: 100 msec. Other two phase tripped from Dikchu after 350 msec
	400 kV Rangpo-Dikchu	Rangpo: B_N, 15.9 km, 7.414 kA	Dikchu: B_N, 25.5 km, 4.72 kA	

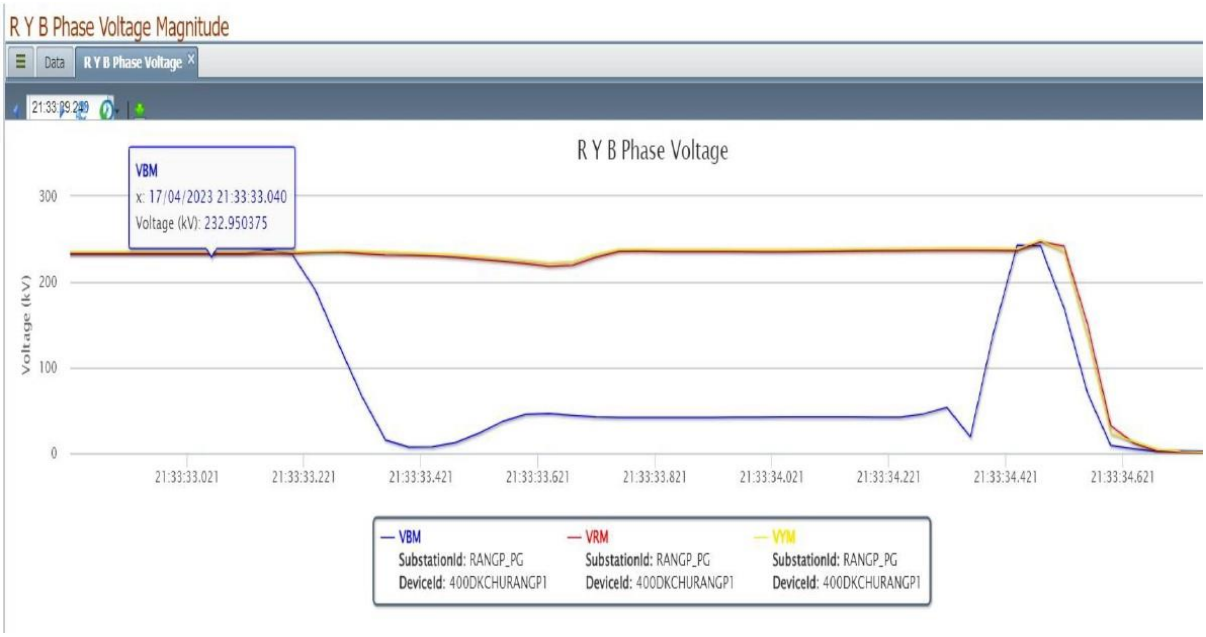

Figure 1: PMU Voltage snapshot of 400/220 kV Rangpo S/s

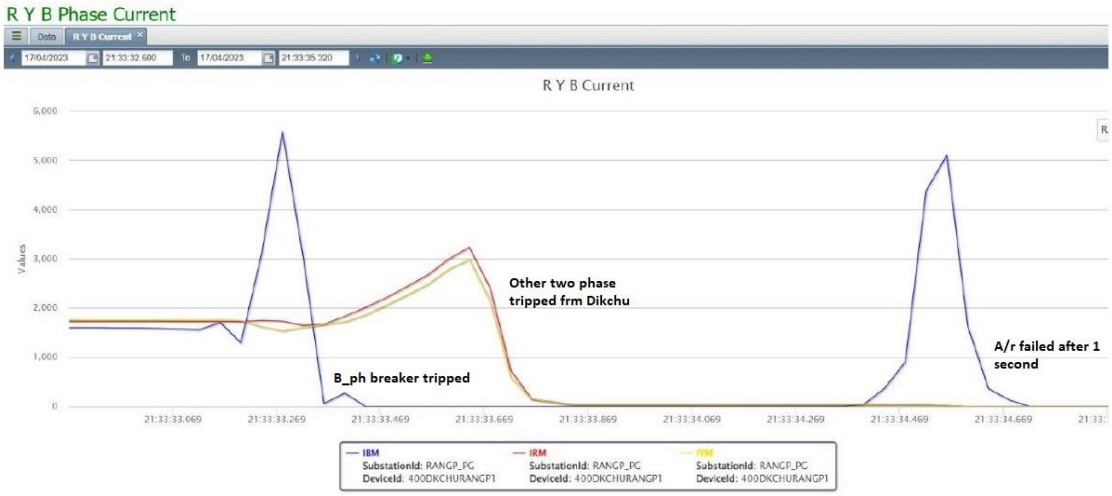

Figure 2: PMU snapshot of current in 400 kV Rangpo-Dikchu @ Rangpo

Restoration (पूर्वावस्था की प्राप्ति)

Transmission/Generation element name	Restoration time
400 kV Teesta 3-Dikchu	22:08
400 kV Rangpo-Dikchu	22:07

Event 2:

At 22:53 Hrs on 17.04.2023, 400 kV Rangpo-Dikchu tripped again due to B_N Fault leading to tripping of all running units at Teesta 3 and Dikchu due to loss of evacuation path as 400 kV Teesta 3-Rangpo was already under breakdown. Around 1237 MW generation loss occurred (Teesta 3:1188 MW, Dikchu: 49 MW).

- **Date / Time of disturbance:** 17-04-2023 at 22:53 hrs.
- **Event type:** GD - 1
- **Systems/ Subsystems affected:** 400 kV Teesta-3, 400 kV Dikchu S/s
- **Load and Generation loss**.
  - 1237 MW generation loss reported during the event.
  - No load loss occurred during the event.

Important Transmission Line/element if out (महत्वपूर्ण संचरण लाइने जो बंद है):

- 400 kV Teesta 3-Rangpo

Major elements tripped (प्रमुख ट्रिपिंग)

- 400 kV Teesta 3-Dikchu
- 400 kV Rangpo-Dikchu

Relay indication and PMU observation (रिले संकेत और पीएमयू पर्यवेक्षण):

समय	नाम	उप केंद्र 1 रिले संकेत	उप केंद्र 2 रिले संकेत	पीएमयू पर्यवेक्षण
22:53	400 kV Teesta 3-Dikchu	Teesta 3: Tripped on O/V	Dikchu: DT received	Around 80 kV dip in B_ph voltage at Rangpo. Fault clearance time: 100 msec. Other two phase tripped from Dikchu after 350 msec
	400 kV Rangpo-Dikchu	Rangpo: B_N, 15.9 km, 8.94 kA	Dikchu: B_N, 28.6 km, 4.821 kA	

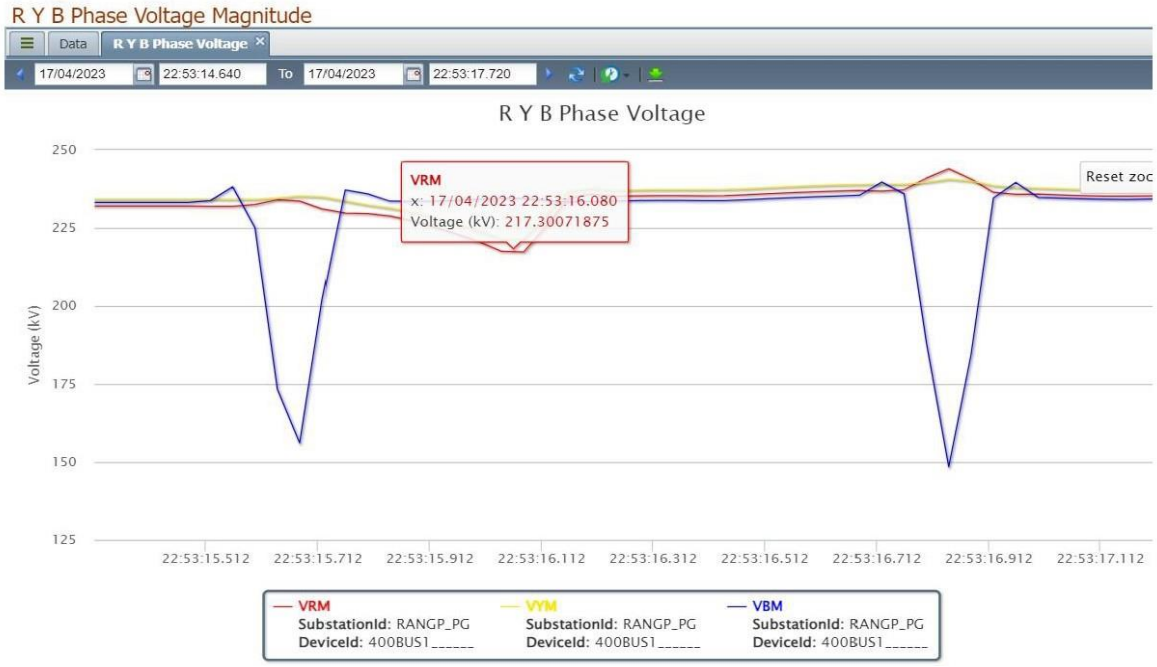

Figure 3: PMU Voltage snapshot of 400/220 kV Rangpo S/s

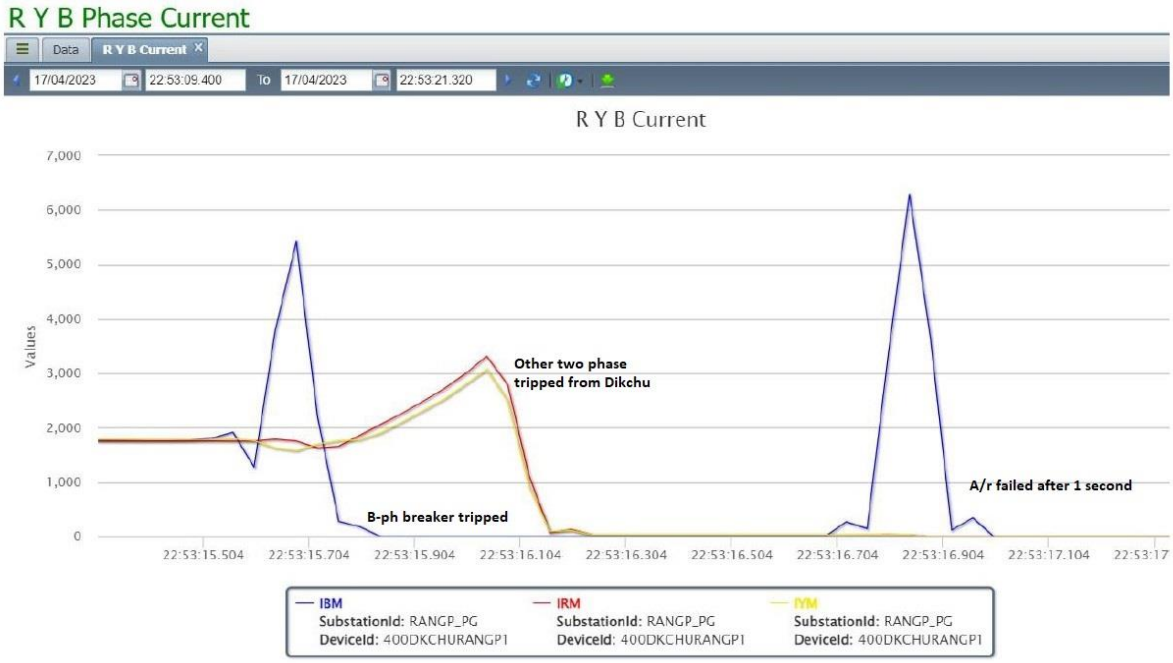

Figure 4: PMU snapshot of current in 400 kV Rangpo-Dikchu @ Rangpo

Restoration (पूर्वावस्था की प्राप्ति)

Transmission/Generation element name	Restoration time
400 kV Teesta 3-Dikchu	23:21
400 kV Rangpo-Dikchu	23:19

Event 3:

At 03:27 Hrs on 18.04.2023, 400 kV Rangpo-Dikchu tripped again due to B_N Fault leading to tripping of all running units at Teesta 3 and Dikchu due to loss of evacuation path as 400 kV Teesta 3-Rangpo was already under breakdown. Around 1096 MW generation loss occurred (Teesta 3:1000 MW, Dikchu: 96 MW).

- **Date / Time of disturbance:** 18-04-2023 at 03:27 hrs.
- **Event type:** GD - 1
- **Systems/ Subsystems affected:** 400 kV Teesta-3, 400 kV Dikchu S/s
- **Load and Generation loss**.
  - 1096 MW generation loss occurred during the event.
  - No load loss occurred during the event.

Important Transmission Line/element if out (महत्वपूर्ण संचरण लाइने जो बंद है):

- NIL

Major elements tripped (प्रमुख ट्रिपिंग)

- 400 kV Teesta 3-Dikchu
- 400 kV Rangpo-Dikchu

Relay indication and PMU observation (रिले संकेत और पीएमयू पर्यवेक्षण):

समय	नाम	उप केंद्र 1 रिले संकेत	उप केंद्र 2 रिले संकेत	पीएमयू पर्यवेक्षण
03:27	400 kV Teesta 3-Dikchu	Teesta 3: Tripped on O/V	Dikchu: DT received	Around 83 kV dip in B_ph voltage at Rangpo. Fault clearance time: 100 msec. Other two phase tripped from Dikchu after 350 msec
	400 kV Rangpo-Dikchu	Rangpo: B_N, 15.41 km, 7.9 kA	Dikchu: B_N, Zone-2, 35.25 km, 4.725 kA	

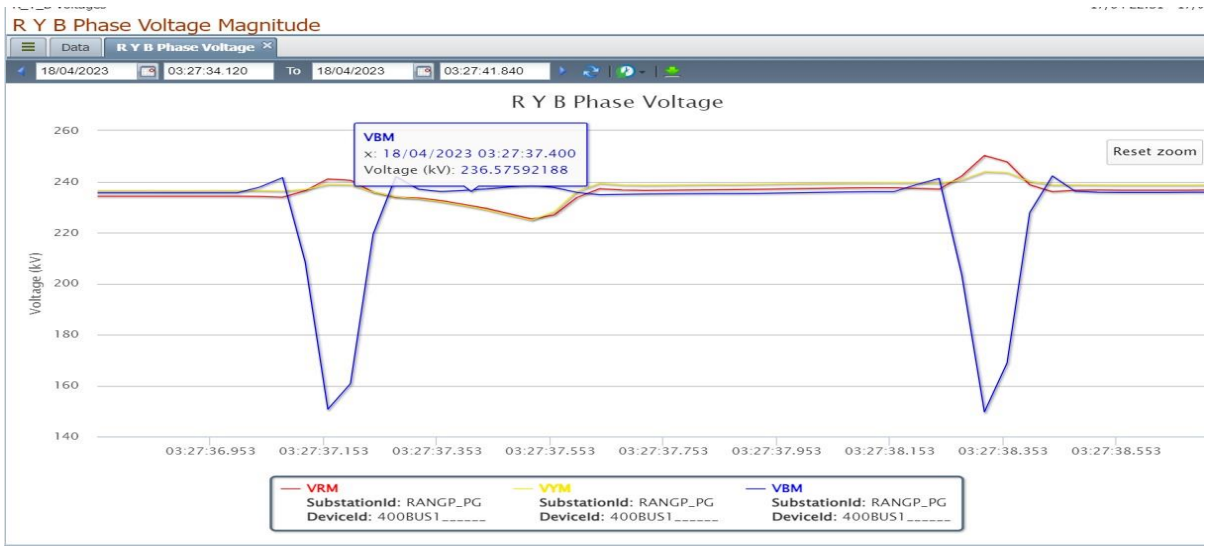

Figure 5: PMU Voltage snapshot of 400/220 kV Rangpo S/s

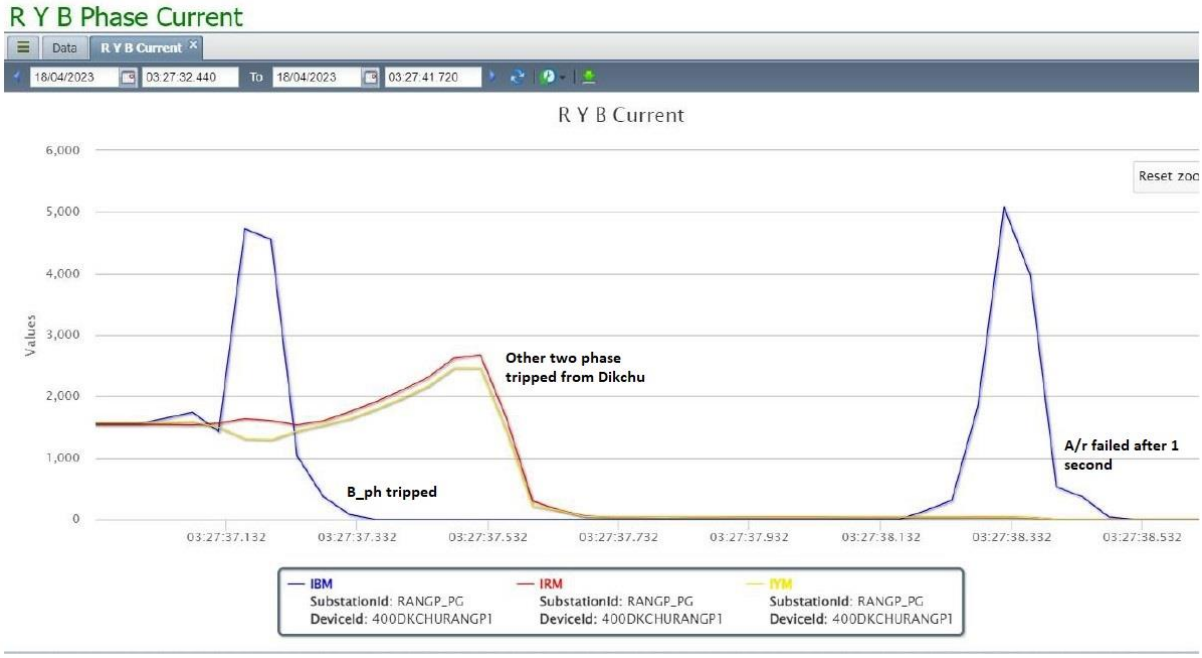

Figure 6: PMU snapshot of current in 400 kV Rangpo-Dikchu @ Rangpo

Restoration (पूर्वावस्था की प्राप्ति)

Transmission/Generation element name	Restoration time
400 kV Teesta 3-Dikchu	04:03
400 kV Rangpo-Dikchu	04:00

Network across the affected area (प्रभावित क्षेत्र का नक्शा)

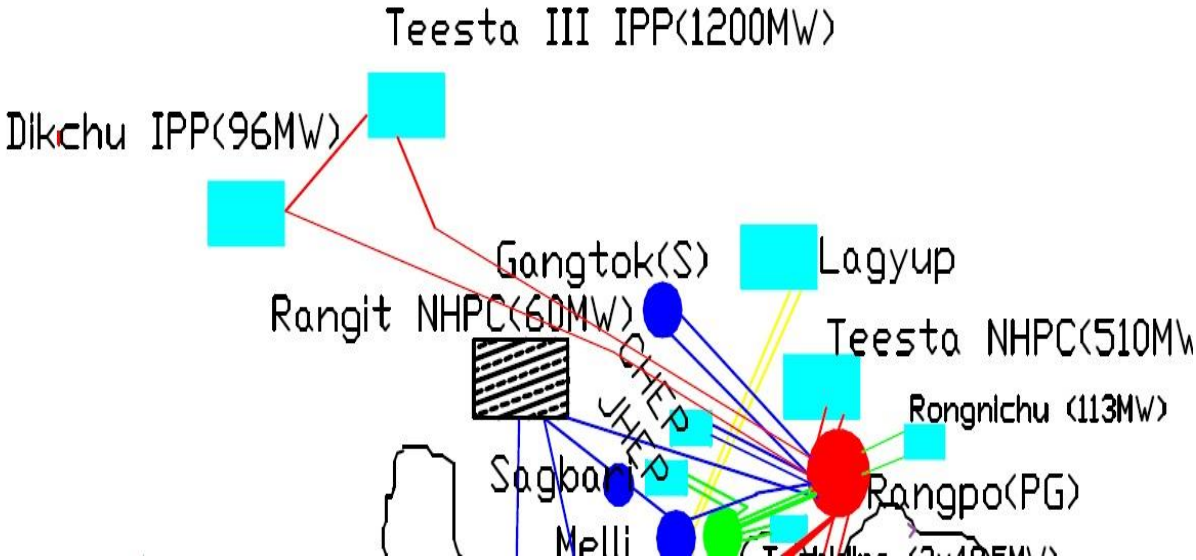

Figure 7: Network across the affected area

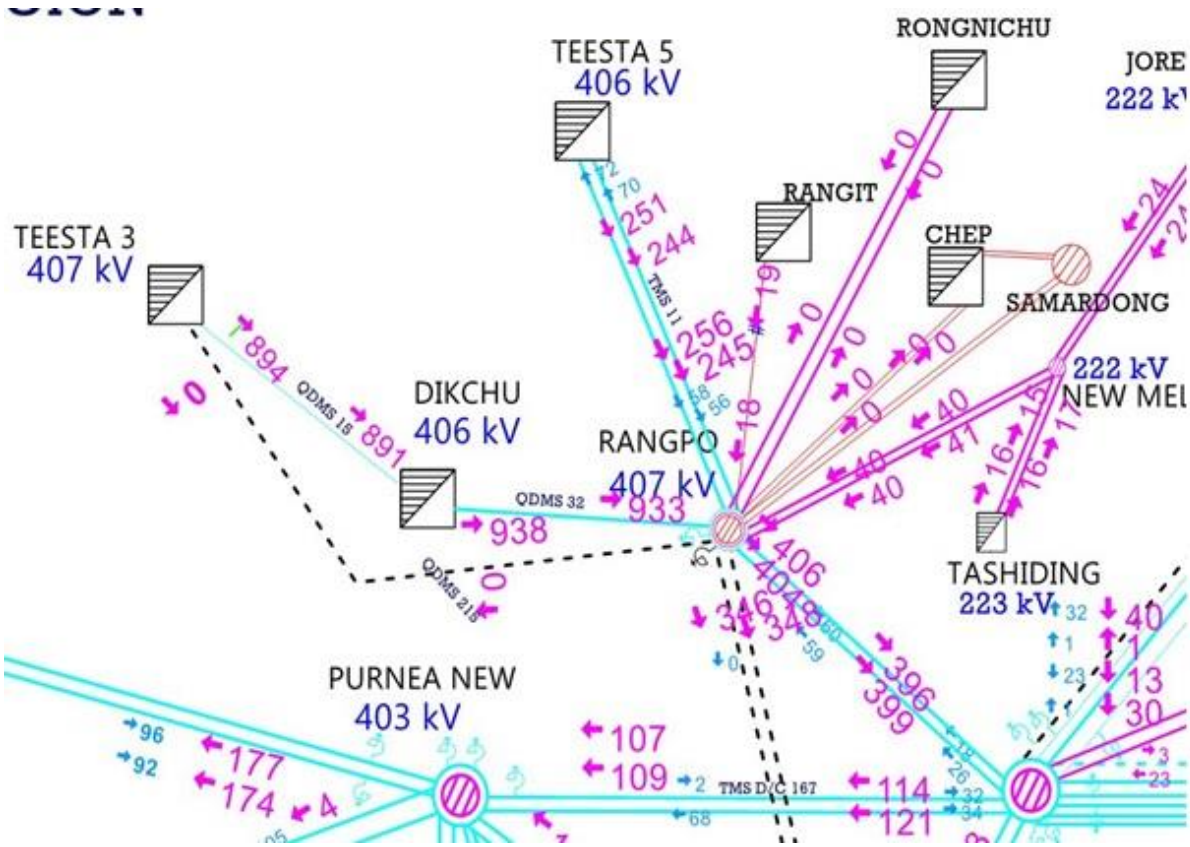

Figure 8: SCADA snapshot of the affected area

Analysis of the event & Protection issue (घटना का विश्लेषण और सुरक्षा समस्या):

- Nature and sequence of operation in all three events were similar.

400 kV Rangpo-Dikchu

- There was a B_N fault in the line, which was cleared within 100 msec. B_ph breaker opened at both ends within 100 msec. However, other two phases at Dikchu tripped after 350 msec. Dikchu intimated that there was some issue in its tie bay which is giving three phase tripping command after some time. **Dikchu may update.**
- A/r attempt failed after 1 second from Rangpo end.
- This line tripped thrice in one night. As reported, a tree came in the induction zone of the line in LILO section. All utilities are requested to proactively take up preventive maintenance activities as these incidents which lead to large generation loss poses threat to grid on both stability and adequacy front.

400 kV Teesta 3-Dikchu

- After tripping of 400 kV Rangpo-Dikchu line, 400 kV Teesta-3 Dikchu tripped on O/V from Teesta-3 and DT sent to Dikchu.

Non-compliance observed (विनियमन का गैर-अनुपालन):

Issues	Regulation Non-Compliance	Utility
DR/EL not provided within 24 Hours	1. IEGC 5.2 (r) 2. CEA grid Standard 15.3	**PG ER-2, Dikchu, Teesta-3**

Status of Reporting (रिपोर्टिंग की स्थिति):

- Complete DR/EL yet to be received from Teesta 3, Dikchu.

Annexure 1: Sequence of events recorded at ERLDC SCADA data at the time of the event.

Sequence of Event not recorded at the time of event.

Annexure 2: DR recorded

Event 1:

DR of 400 kV Rangpo-Dikchu (Rangpo)

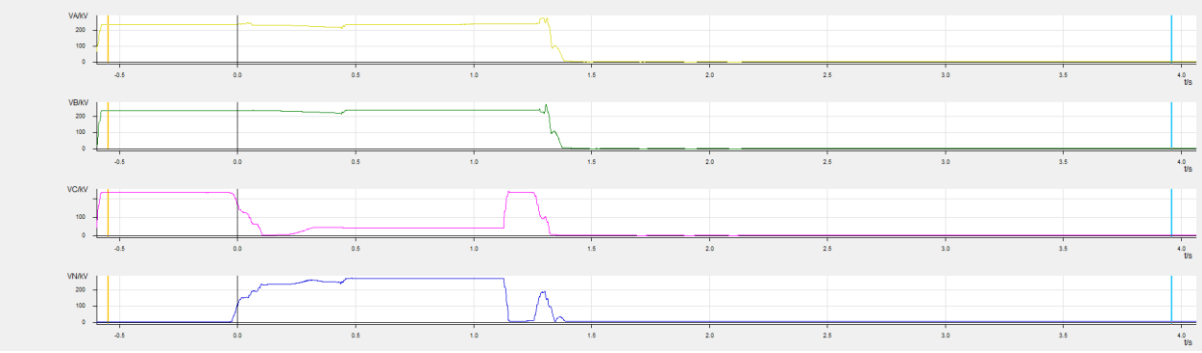

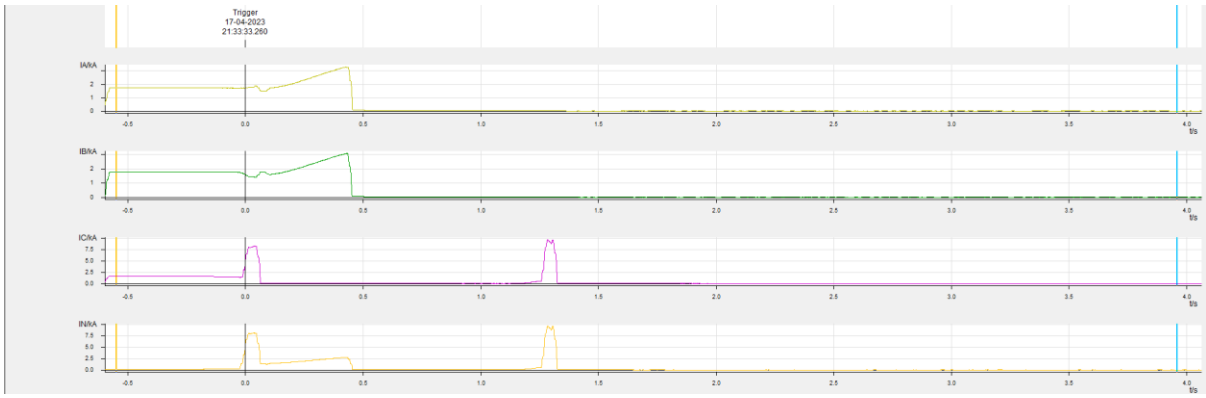

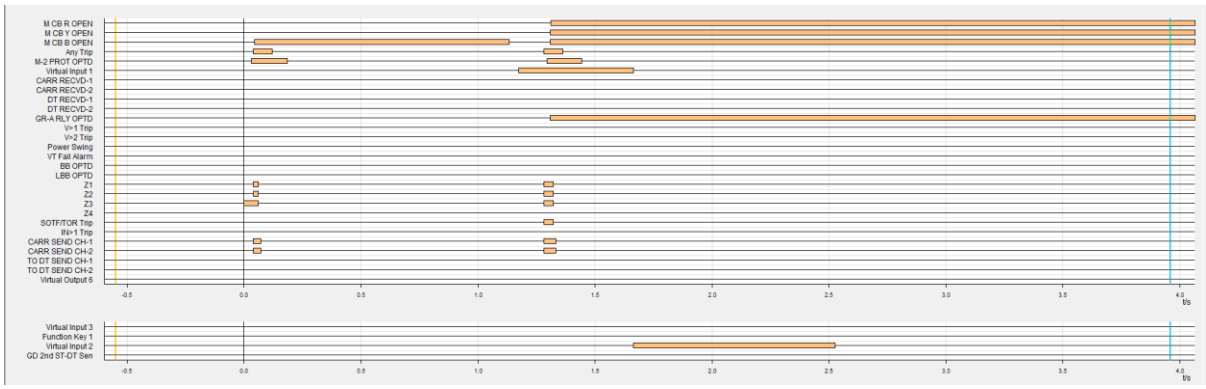

Event 2:

DR of 400 kV Rangpo-Dikchu (Rangpo)

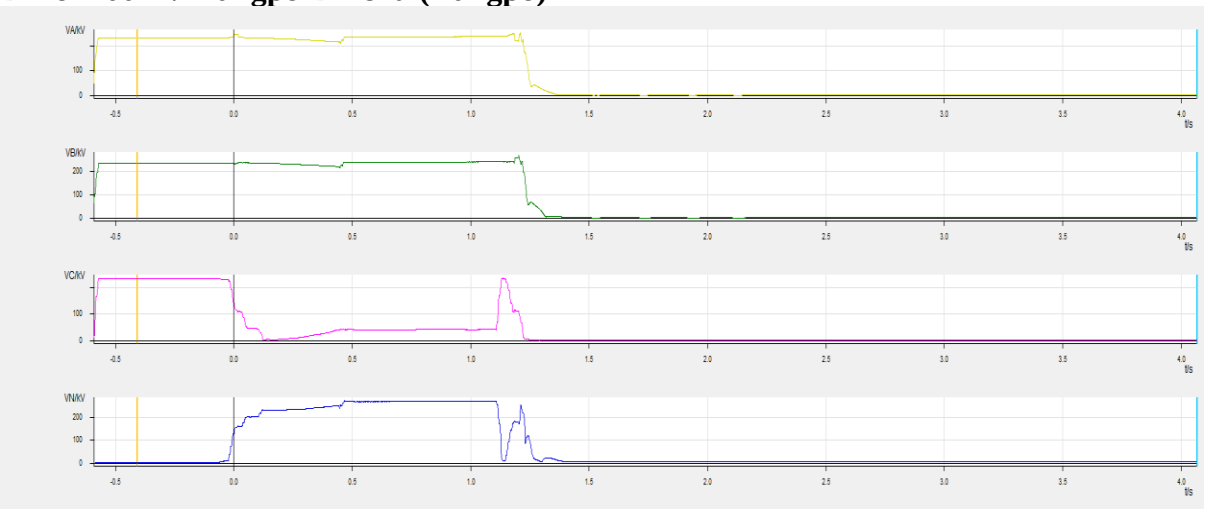

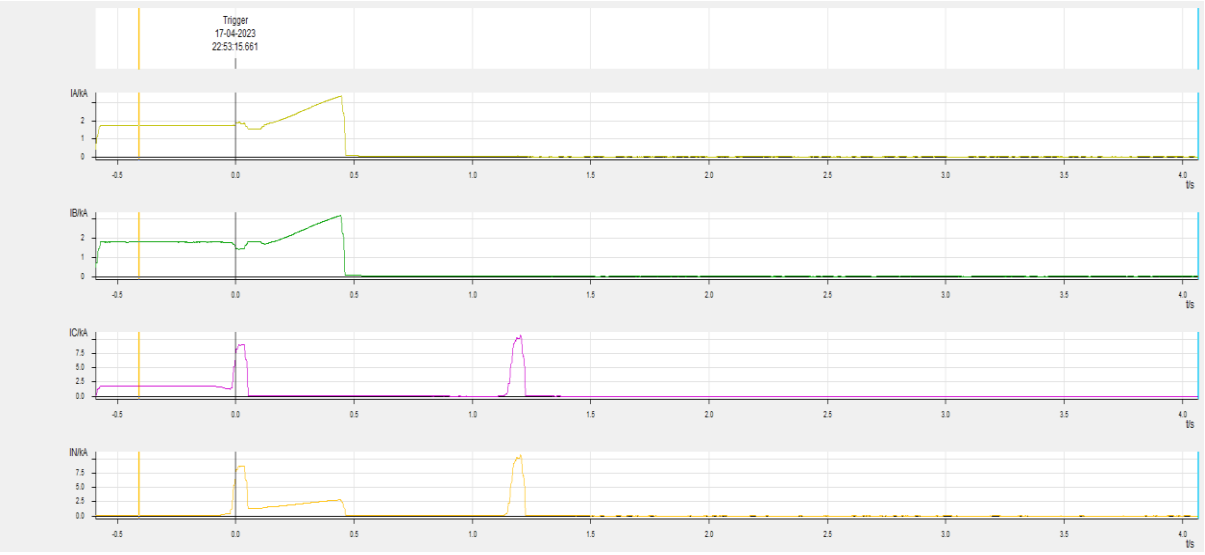

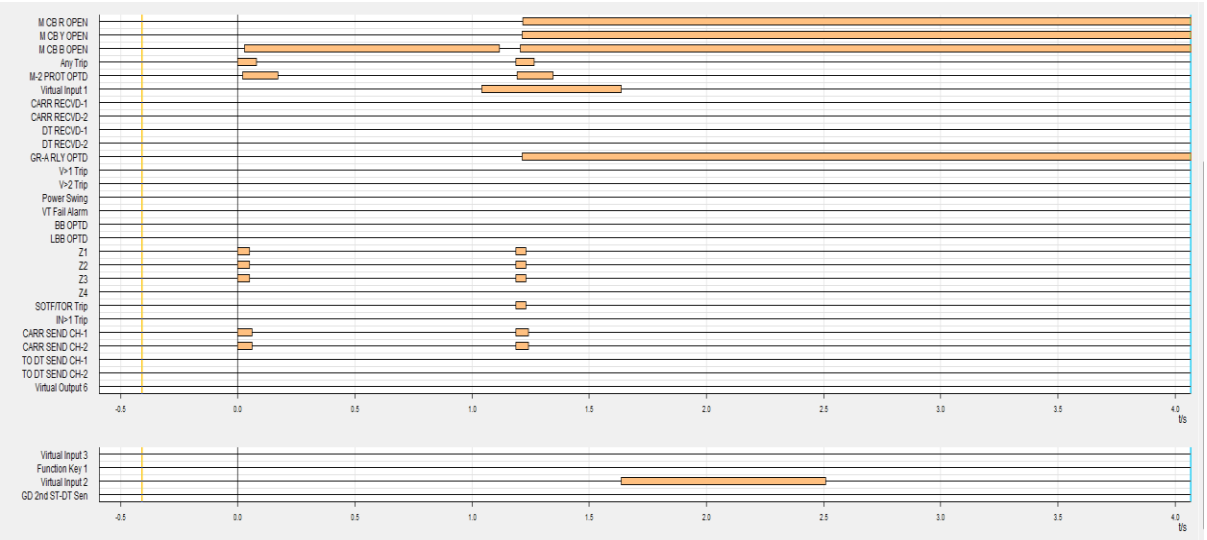

Event 3:

DR of 400 kV Rangpo-Dikchu (Rangpo)

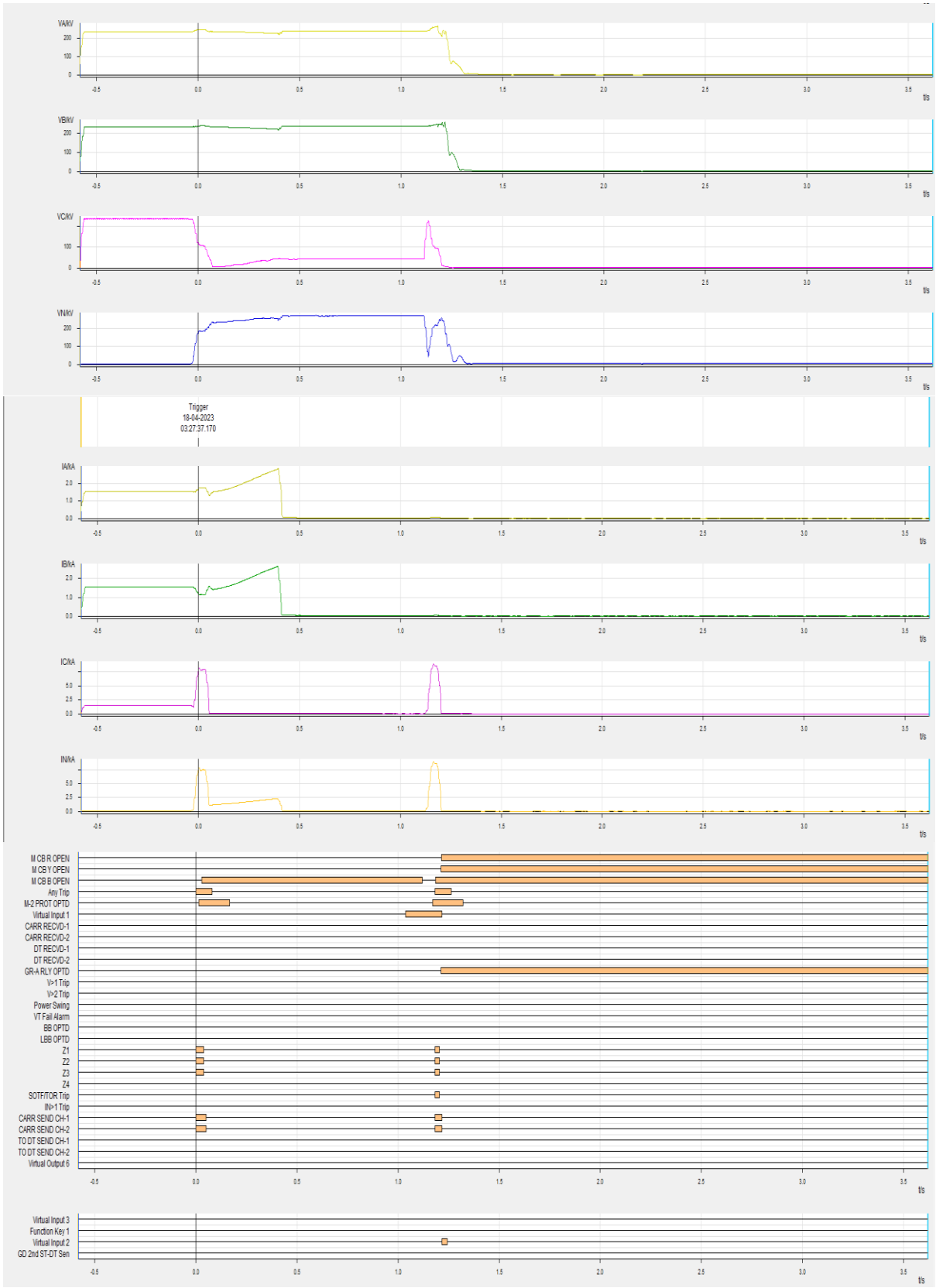

DR of 400 kV Teesta 3-Dikchu (Teesta 3)

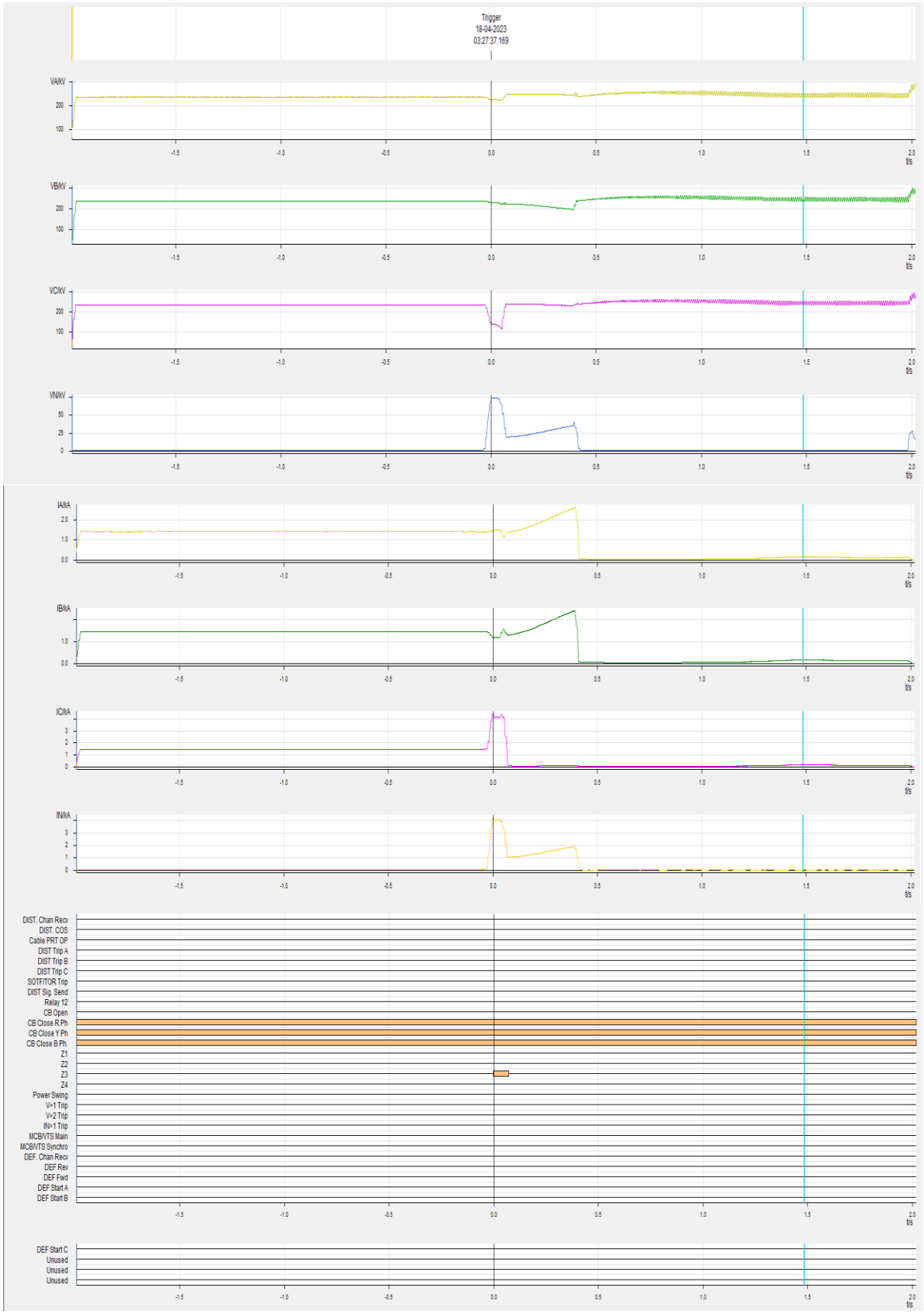

Annexure B.4

Tripping of 400 kV Barh-Kahalgaon-2

08:21 Hrs, 15.04.2023

Tripping of 400 kV Barh-Kahalgaon-2

- While availing shutdown of 400 kV Barh-Motihari-2, its dia element at Barh, i.e. 400 kV Barh-Kahalgaon-2 tripped.
- As reported, tie bay of this dia was not opened and in live condition isolator opening was attempted at Barh.
- 400 kV Barh-KhSTPP-2 tripped immediately from Barh.

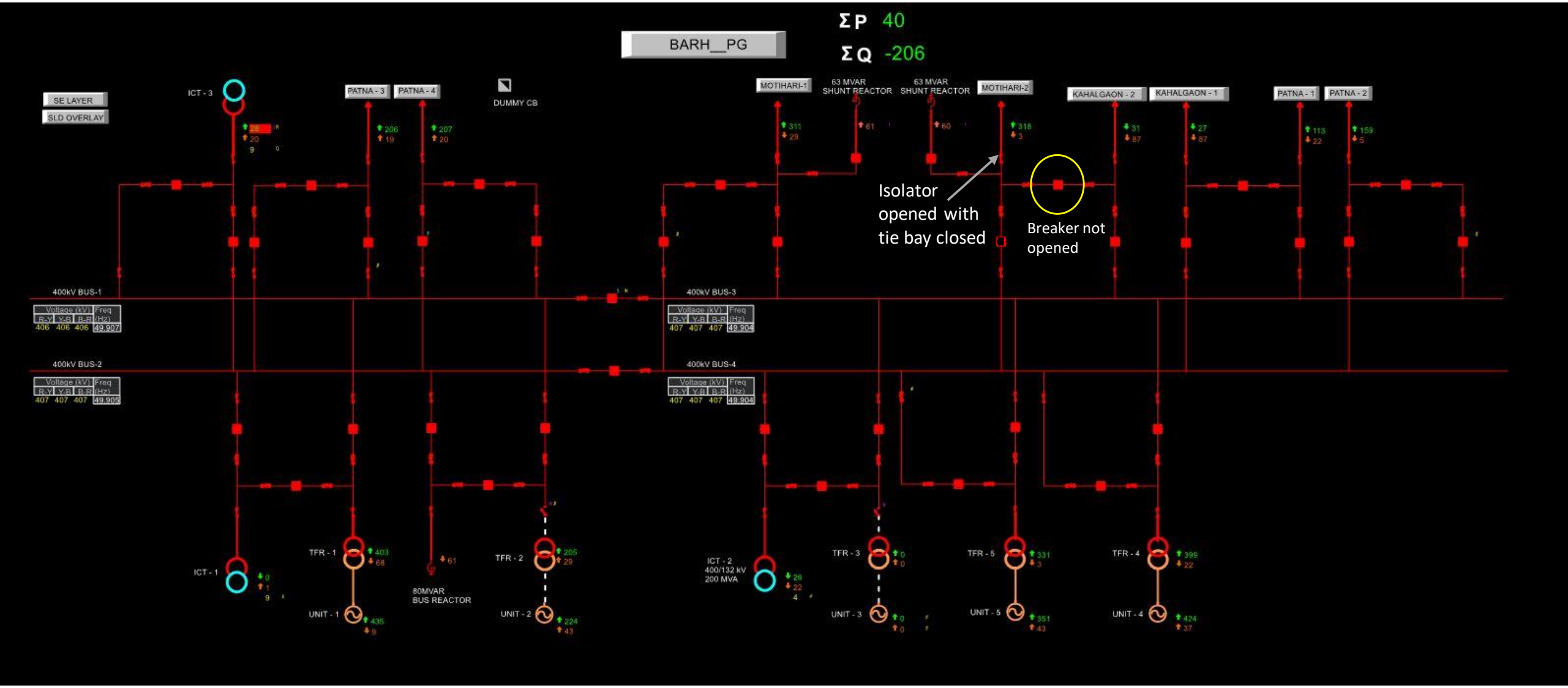
BARH__PG
ΣP 40
ΣQ -206
SE LAYER
SLD OVERLAY
ICT - 3
PATNA - 3
PATNA - 4
DUMMY CB
MOTIHARI-1
63 MVAR SHUNT REACTOR
63 MVAR SHUNT REACTOR
MOTIHARI-2
KAHALGAON - 2
KAHALGAON - 1
PATNA - 1
PATNA - 2
Isolator opened with tie bay closed
Breaker not opened
400kV BUS-1
400kV BUS-2
400kV BUS-3
400kV BUS-4
ICT - 1
TFR - 1
UNIT - 1
80MVAR BUS REACTOR
TFR - 2
UNIT - 2
ICT - 2 400/132 kV 200 MVA
TFR - 3
UNIT - 3
TFR - 5
UNIT - 5
TFR - 4
UNIT - 4

Scheme discrepancies

- Interlocking should have not allowed opening of line isolator under live condition at Barh
- 400 kV Barh-Kahalgaon-2 tripped immediately from Barh in Zone-4, which if had taken 500 msec to operate as per scheme, then all feeders at Barh would have tripped and around 1900 MW generation loss would have occurred.

Operational Issues

- Before opening of isolator, voltage was not checked at both ends.
- Breaker status also was not checked at NTPC Barh.
- SoP for switching was not followed

Way Forward

- Interlocking scheme to be checked for all bays at NTPC Barh.
- SoPs may be relooked into to further make it robust and deviations from SoP may be taken up promptly.
- Proper communication and exchange of information between concerned pair of S/s.

Annexure B.6

List of important transmission lines in ER which tripped in April-2023

Sl. No.	LINE NAME	TRIP DATE	TRIP TIME	RESTORATION DATE	RESTORATION TIME	Relay Indication LOCAL END	Relay Indication REMOTE END	Reason	Fault Clearance time in msec	Remarks	DR Configuration Discrepancy	DR/EL RECEIVED FROM LOCAL END	DR/EL RECEIVED FROM REMOTE END
1	400KV ALIPURDUAR (PG)-BINAGURI-4	01-04-2023	05:04	01-04-2023	18:16	Alipurduar: B_N, 43 km, 0.19 kA	Binaguri: B_N, 90.63 km, 4.55 kA	B-Earth	100	A/r successful. Tripped again within reclaim time		No	Yes

2	400 KV BINAGURI-MALBASE-1	01-04-2023	05:24	01-04-2023	06:22	Binaguri: Y_N, 43.52 km, 5.672 kA		Y-Earth	1200	Line tripped from Binaguri after 100 msec and A/r attempt taken after 1 sec which was unsuccessful. However, fault was not cleared from Malbase till 1.2 seconds.		Yes	NA
3	400KV BIHARSARIFF(PG)-PUSAULI-1	01-04-2023	15:43	01-04-2023	16:52	Biharshariff: R_N, Zone-1, 48.5 km, 6.07 kA	Pusauli: R_N , 150.5 km, 2.5 kA	R-Earth	100	Three phase tripping for single phase fault. A/r kept in non-auto mode for OPGW installation work		Yes	Yes
4	400KV NEW RANCHI-CHANDWA-2	01-04-2023	15:52	02-04-2023	03:17	New Ranchi: R_N, Zone-1, 44.4 km, 9.1kA	Chandwa: R_N, Zone-1, 15.2 km, 8.2 kA	R-Earth	100	A/r failed after 1 second		Yes	Yes
5	220KV MAITHON-DHANBAD-1	01-04-2023	19:28	01-04-2023	19:42	Maithon: R_N, Zone-2, 175 km, 1.2 kA	Dhanbad: A/r Successful	R-Earth	350	Tripped in Zone-2 time from Maithon. A/r successful at Dhanbad		Yes	Yes
6	400KV RANCHI-ROURKELA-1	02-04-2023	07:11	03-04-2023	03:16	Ranchi: Y_N, 13.5 km, 12.33 kA	Rourkela: Y_N, 103.8 km, 2.4 kA	Y-Earth	100	Three phase fault during A/r attempt		Yes	No
7	400KV MEERAMUNDALI-MENDHASAL-II	02-04-2023	12:50	02-04-2023	18:59	Meramundali: R_N, Zone-1, 60.3 km, 3.88 kA	Mendhasal: R_N, Zone-1, 32.9 km, 5.78 kA	R-Earth	100	A/r failed after 1 second at Meramundali. Three phase tripping at Mendhasal		Yes	Yes

8	220KV JODA-RAMCHANDRAPUR-1	02-04-2023	14:32	02-04-2023	15:23	Joda: R_N, 78.35 km,1.4 kA	Ramchandrapur:R_N, 59.9 km, 1.69kA	R-Earth	800	Resistive earth fault. Tripped after 800 msec from Ramchandrapur. Three phase tripping for single phase fault from both ends. Back-up O/c also operated at Ramchandrapur. Time co-ordination may be done for O/c		Yes	Yes
9	400KV BINAGURI-TALA-1	02-04-2023	22:43	02-04-2023	23:11	Binaguri : R_N, 3.33 kA, A/r Successful	Tala: R_N, 18.2 km	R-Earth	100	A/r successful from Binaguri. Three phase tripping at Tala.		Yes	NA
10	400KV MEERAMUNDALI-MENDHASAL-II	03-04-2023	10:11	03-04-2023	19:43	Meramundali:R_N, Zone-1, 55.15 km, 4.52kA	Mendhasal: R_N, Zone-1, 33.2 km, 5.33 kA	R-Earth	100	A/r failed after 1 second at Meramundali. Three phase tripping at Mendhasal		Yes	Yes
11	220KV KHAGARIA-NEW PURNEA-2	03-04-2023	11:23	03-04-2023	12:16	Khagaria:Y_B , Zone-1, 45.77 km, Ir= 46.12 A, Iy= 3.869 kA, Ib= 37.85kA	Purnea:Y_B, Zone-1, 21.58 km,4.05 kA	Y-B	100	Phase-to-phase fault.	DR length less at both ends	Yes	Yes
12	400KV BARIPADA-KHARAGPUR-1	03-04-2023	11:56	03-04-2023	12:32	Baripada: Y_N, 100.3 km,0.874 kA	Kharagpur: Y_N, Zone-1, 21.58 km, 4.05 kA	Y-Earth	100	A/r successful. Line tripped again within reclaim time		Yes	Yes

13	400KV MEERAMUNDALI-MENDHASAL-II	04-04-2023	10:00	04-04-2023	18:26	Meramundali: R_N, Zone-1, 3.76 kA,	Mendhasal:R_N, Zone-1, 4.78 kA	R-Earth	100	A/r successful from Mendhasal. Three phase tripping at Meramundali.		Yes	Yes
14	220KV SAHARSA-BEGUSARAI-2	05-04-2023	13:15	05-04-2023	16:13		Begusarai: Master trip	No fault	NA	Master trip operated. BSPTCL may explain.		NA	NA
15	220KV SAHARSA-BEGUSARAI-1	05-04-2023	13:15	05-04-2023	16:14		Begusarai: Master trip	No fault	NA	Master trip operated at Begusarai and tripped from Begusarai only. Later at 13:43 Hrs, line tripped from Saharsa due to R_N fault.		Yes	NA
16	220KV CHANDIL-STPS(WBPDCL)-1	05-04-2023	20:40	05-04-2023	21:15	Chandil:Y_N, Zone-1, 15.3 km, 5.76 kA	Santaldih: Y_N, Zone-2, 87 km, 1.9 kA	Y-Earth	350	Tripped in Zone-2 from Santaldih. A/r successful at Chandil		No	Yes
17	400KV BARIPADA-KHARAGPUR-1	06-04-2023	11:22	06-04-2023	11:53	Baripada: Y_N, 100 km,0.87 kA	Kharagpur:Y_N, Zone-1, 15 km, 82 kA	Y-Earth	100	A/r failed after 1 second		Yes	Yes
18	400KV RAJARHAT-FSTPP-1	06-04-2023	11:59	06-04-2023	12:47	Rajarhat: R_N, 22.5 km, 4.42 kA	FSTPP: R_N, Zone-1, 312 km, 1.7 kA	R-Earth	100	Other two phase at Farakka tripped after 1.2 seconds. NTPC may explain.		No	Yes

19	220KV TSTPP-MEERAMUNDALI-1	06-04-2023	14:56	06-04-2023	17:41	Talcher: B_N, Zone-1, 27.1 km, 4.6 kA	Meramundali: B_N, Zone-1, 11.42 km, 7.57 kA	B-Earth	100	A/r successful from both ends. Line tripped again within reclaim time		No	Yes
20	220KV TSTPP-MEERAMUNDALI-2	06-04-2023	14:56	06-04-2023	17:42	Talcher: R_N, Zone-1, 28.8 km, 4.27 kA	Meramundali:R_N, Zone-1, 7.08 km, 12.84 kA	R-Earth	100	A/r successful from Meramundali. However, no A/r attempted from TSTPP and other two phase tripped on PD 2 seconds. Later, line tripped from Meramundali also		No	Yes
21	220KV JAMSHEDPUR-JINDAL-1	08-04-2023	14:21	08-04-2023	15:18	Jamshedpur: B_N, Zone-1, 97.9 km, 1.333 kA	Jindal:B_N, Zone-1, 46.8 km, 2.19 kA	B-Earth	100	Three phase tripping for single phase fault.		Yes	No
22	400KV BARIPADA-KHARAGPUR-1	09-04-2023	12:24	09-04-2023	20:44	Baripada: Y_E, Zone-1, 59.73 km, 4.352 kA	Kharaghpur: Y_E, Zone-1, 40 km, 5.91 kA	Y-Earth	100	A/r successful. Tripped again within reclaim time		Yes	Yes
23	220KV DALTONGANJ-CHATRA-1	10-04-2023	12:34	10-04-2023	13:36	Daltonganj: B_N, Zone-1, 71.84 km, 1.7 kA		B-Earth	100	Line tripped twice due to B_N fault and A/r was successful in both instances. Later tripped on O/c E/f from Daltonganj		Yes	No

24	220KV JODA-RAMCHANDRAPUR-1	10-04-2023	13:13	10-04-2023	15:13	Joda: R_N, Zone-1, 75.39 km, 1.361 kA		R-Earth	100	A/r failed after 1 second at Joda. Three phase tripping intiiated at Ramchandrapur, however, other two phase didn't trip and later LBB operated.		Yes	Yes
25	400KV MERAMUNDALI-LAPANGA-2	10-04-2023	13:36	10-04-2023	16:53	Meramundali:Y_N, 26.2 km, 7.9 kA	Lapanga:Y_N, 151 km, 2.5 kA	Y-Earth	100	A/r failed after 1 second		Yes	Yes
26	220KV DALTONGANJ-CHATRA-1	10-04-2023	14:06	10-04-2023	16:20	Chatra:B_N, 77.29 km, 1.667 kA		B-Earth	100	Line tripped twice due to B_N fault and A/r was successful in both instances. Later tripped on O/c E/f from Daltonganj		Yes	No
27	220KV JODA-RAMCHANDRAPUR-1	11-04-2023	11:55	11-04-2023	13:03	Joda: Y_B, 26.747 km, Iy:2.63 kA, Ib: 3.51 kA	Ramchandarpur:Y_B, Zone-1, 94.07 km Iy:2.668 kA, Ib: 2.4 kA	Y-B-Earth	100	Phase to phase fault		Yes	Yes
28	220KV DALTONGANJ-CHATRA-1	11-04-2023	12:07	11-04-2023	19:56	Daltongunj: B_N, 73.37 km, 0.715 kA	Chatra: Zone-1, 0.552 kA	B-Earth	100	A/r failed after 1 second		Yes	No
29	400KV KODERMA-BIHARSARIFF(PG)-2	11-04-2023	13:16	11-04-2023	15:17	Koderma: Y_N, Zone-1, 4.18 kA	Biharshariff:Y_N, 49.3 km, 5.4 kA	Y-Earth	100	A/r successful. Tripped again within reclaim time.	DR length less at Koderma	Yes	Yes

30	220KV-JODA-RAMCHANDRAPUR-1	12-04-2023	10:08	12-04-2023	10:56	Joda: R_N,3.15 km, 0.98 kA	Ramchandrapur: R_N,Zone-2, 126.5 km, Ia=1.63 kA	R-Earth	400	A/r successful from Joda. Three phase tripping at Ramchandrapur (Zone-2)		Yes	Yes
31	220KV JODA-RAMCHANDRAPUR-1	12-04-2023	11:10	12-04-2023	18:08	Joda: R_N, 74.4 km, 0.9 kA	Ramchandarpur: R_N, B_N, Y_N, 54.6 km, Ia= 1.82 kA, Ib= 0.36 kA, ic= 0.41 kA	R-Earth	100	A/r successful at Joda. Three phase tripping intiiated at Ramchandrapur, however, other two phase didn't trip and later LBB operated.		Yes	Yes
32	400KV TSTPP-ROURKELA-1	12-04-2023	13:52	12-04-2023	15:39	Talcher: B_N, Zone-1, 81 km, 4.4 kA	Rourkela:B_N, 78.6 km, 4.5 kA	B-Earth	100	A/r failed after 1 second		No	Yes
33	400KV TSTPP-ROURKELA-2	12-04-2023	14:10	12-04-2023	15:30	TSTPP: R_N, Zone-1, 89.93 km, 3.44 kA	Rourkella:R_N, Zone-1, 74 km, 4.5kA	R-Earth	100	A/r successful. Tripped again within reclaim time.		No	Yes
34	400KV PUSAULI(PG)-DALTONGANJ-1	12-04-2023	15:12	12-04-2023	16:00	Pusauli: R_N, 114 km, 2.4 kA	Daltongunj: R_N, 67 km, 1.3 kA	R-Earth	1000	Resistive fault. DEF operated at Daltonganj and DT sent to remote end. DEF settings may be reviewed.		Yes	Yes
35	765KV NEW RANCHI-DHARAMJAIGARH-1	13-04-2023	02:21	13-04-2023	12:06	New Ranchi: R_N, Zone-1, 63 km, 6.011 kA	Dharamjaigarh: R_N,Zone-2, 258.16 km, 3.66 kA	R-Earth	100	A/r failed after 1 second		Yes	NA

36	220KV JODA-RAMCHANDRAPUR-1	13-04-2023	09:38	13-04-2023	10:45	Joda: R_N, Zone-1, 1.74 km, 0.8kA	Ramchandarpur: R_N, Zone-1, 1.87 kA	R-Earth	100	A/r successful at Joda. Three phase tripping intiiated at Ramchandrapur, however, other two phase didn't trip and later LBB operated.		Yes	Yes
37	220KV DARBHANGA(DMTCL)-LAUKAHI-1	13-04-2023	11:03	13-04-2023	12:31	Dharbhanga: R_N, Zone-2, 73 km, 2.2 kA	Laukahi: R_N, 4.87 kA	R-Earth	100	A/r attempt successful from DMTCL after 650 msec. Three phase tripping at Laukahi.		No	Yes
38	220KV JODA-RAMCHANDRAPUR-1	13-04-2023	13:00	13-04-2023	15:37	Joda: Y_N, Zone-2, 11.5 km, 1.147 kA	Ramchandarpur: Y_N, Zone-1, 14.3 km, 6.06 kA	Y-Earth	350	Tripped in Zone-2 from Joda. Three phase tripping at Ramchandrapur for single phase fault.		Yes	Yes
39	220KV TENUGHAT-BIHARSARIFF-1	14-04-2023	11:28	14-04-2023	18:59	Tenughat: Y_N, 51.4 km, 1.28 kA	Biharshariff:Y_N, 1.2 kA	Y-Earth	100	Three phase tripping for single phase fault		Yes	No
40	400KV DURGAPUR-JAMSHEDPUR-1	14-04-2023	16:02	14-04-2023	16:49	Durgapur: Y_N,Zone-1, 48 km, 4.76 kA	Jamshedpur: Y_N, Zone-1, 106.42 km, 3.0826 kA	Y-Earth	100	A/r failed after 1 second		No	Yes
41	400KV KHSTPP-BARH-2	15-04-2023	08:21	15-04-2023	09:49	KHSTPP: Y_B, Zone-2, Iy-6.66 kA, Ib- 6.66 kA		Y-B-Earth	100	Phase to phase fault		No	No

42	220KV SAHARSA-BEGUSARAI-2	15-04-2023	10:12	18-04-2023	18:47		Begusarai: Master trip	No fault	NA	Master trip operated. BSPTCL may explain.		NA	NA
43	220KV SAHARSA-BEGUSARAI-1	15-04-2023	10:12	18-04-2023	18:44		Begusarai: Master trip	No fault	NA	Master trip operated. BSPTCL may explain.		NA	NA
44	400KV BIHARSARIFF(PG)-BALIA-2	15-04-2023	11:55	15-04-2023	13:31	Biharshariff: R_N, 161.62 km, 3 kA		R-Earth	100	A/r failed after 1 second		Yes	NA
45	220KV DEHRI-GAYA-2	15-04-2023	12:03	15-04-2023	16:38	Dehri: B_N, 21.96 km, 2.92 kA	Gaya: B_N, 75.3 km, 1.95 kA	B-Earth	100	A/r failed after 1 second		Yes	Yes
46	400KV JEERAT-NEW CHANDITALA-1	16-04-2023	12:32	16-04-2023	12:50	Jeerat: B_N, Zone-2, 74 km, 4.75 kA	New chanditala: B_N, Zone-1, 8.98 km, 14.54 kA	B-Earth	100	A/r failed after 1 second		Yes	No
47	400KV BINAGURI-TALA-1	16-04-2023	15:15	16-04-2023	15:55	Binaguri: DT received	Tala: Didn’t trip	No fault	NA	DT received at Binaguri		No	NA

48	220KV DALKHOLA (PG)-GAZOLE-1	17-04-2023	09:25	17-04-2023	14:02	Dalkhola: Didn't trip	Gazole: B_N, Zone-1, VT fuse fail	No fault	NA	Tripped from Gazole only. VT fuse failed and distance protection operated. WBSETCL may explain.		NA	No
49	220KV DALTONGANJ-CHATRA-1	17-04-2023	09:42	17-04-2023	10:49		Chatra: B_N, Zone-1, 139.68 km, 0.6 kA	B-Earth	100	A/r attempt couldn't be ascertained from PMU		No	No
50	220KV JODA-RAMCHANDRAPUR-1	17-04-2023	11:15	17-04-2023	12:10	Joda:R_E, 75.03 km, 1.320 kA	Ramchandarpur: R_N, 57 km, 2.33 kA	R-Earth	100	A/r successful from Joda only. Tripped again within reclaim time		No	No
51	400KV DURGAPUR-KHSTPP-1	17-04-2023	12:20	17-04-2023	13:13	Durgapur: Y_N, 190.5 km, 2.1 kA	Kahalgaon: Y_N, 29.5 km, 5.1 kA	Y-Earth	100	A/r failed after 1 second		No	No
52	220KV DALTONGANJ-CHATRA-1	18-04-2023	09:40	18-04-2023	19:35	Daltonganj:B_N, 147 km, 1.251 kA	Chatra: Zone-1, 34.89 km, Ia= 0.1692 kA, Ib= 0.222 kA, Ic= 0.954 kA	B-Earth	100	A/r failed after 1 second		No	No
53	220KV JODA-RAMCHANDRAPUR-1	18-04-2023	11:35	18-04-2023	13:03	Joda: Y_E, 17.27 km, 3.027 kA	Ramchandarpur:Y_N, Zone-1, 111.2 km	Y-Earth	100	A/r failed after 1 second from Joda.	DR length less at Ramchandrapur	Yes	Yes

54	220KV CHANDIL-STPS(WBPDCL)-1	18-04-2023	11:43	18-04-2023	18:53		STPS: R_E, Zone-1, 69.1 km	R-Earth	100	At 11:43 Hrs, R_N fault occurred and Ar/ was successful from Chandil only, other two phase at Santaldih tripped on PD. Later at 11:46 Hrs, phase to phase fault occurred and line tripped from Chandil also.		Yes	Yes
55	220KV PATNA-FATUHA-1	18-04-2023	11:47	18-04-2023	18:07	Patna: B_E, 12.22 km, 9.015 kA	Fatuha: B_E, Zone-1, 5.967 kA	B-Earth	100	Three phase tripping for single phase fault however, B_ph at Fatuah didn't trip. Whether LBB operated. A/r attempt also taken by Fatuah after 1 second however, Y_ph breaker didn't close. BSPTCL may explain.		Yes	Yes
56	220KV MAITHON-DUMKA-1	19-04-2023	09:34	19-04-2023	10:17	Maithon:B_N, 60.57 km, 1.54 kA	Dumka: B_N, 24.47 km	B-Earth	100	A/r failed after 1 second		No	No

57	220KV JODA-RAMCHANDRAPUR-1	19-04-2023	13:07	21-04-2023	18:07	Joda:R_N, Zone-1, 75.7 km, 1.37 kA	Ramchandrapur: Zone-1, Zone-2, 1.77 kA	R-Earth	100	A/r failed at Joda after 1 second. Three phase tripping intiiated at Ramchandrapur, however, other two phase didn't trip and later LBB operated.		Yes	Yes
58	400KV BINAGURI-TALA-1	19-04-2023	20:29	19-04-2023	21:12	Binaguri : DT received		No fault	NA	Details may be shared by PG ER-2		No	NA
59	400KV BINAGURI-TALA-1	19-04-2023	21:35	19-04-2023	22:40	Binaguri: B_N, 126 km, 2 kA	Tala: B_N, 60.8 km	B-Earth	2300	Resistive fault.		No	NA
60	400KV ROURKELA-JHARSUGUDA-4	20-04-2023	01:49	20-04-2023	04:37	Rourkela: Y_N, Zone-1, 22.95 km 11.12 kA	Jharsuguda: Y_N, Zone-1, 87.2 km , 4.94 kA	Y-Earth	100	A/r successful. Tripped again within reclaim time.		No	No
61	400KV JHARSUGUDA-ROURKELA-2	20-04-2023	01:49	20-04-2023	04:30	Jharsuguda: B_N, Zone-1, 3.6 kA	Rourkela: B_N, Zone-1, 18.92 km 1.4 kA	B-Earth	100	A/r successful. Tripped again within reclaim time.		No	No

62	400KV BARIPADA(PG)-NEW DUBURI-1	21-04-2023	10:05	21-04-2023	10:44	Baripada: DT received		No fault	NA	DT received at Baripada. OPTCL/PG Odisha may explain.		Yes	No
63	400KV MEDINIPUR-KHARAGPUR-1	21-04-2023	10:59	21-04-2023	15:41	Medinipur: R_N, 37 km, 5.2 kA	Kharaghpur: R_N, 63 km, 4.2 kA	R-Earth	100	A/r successful from Kharagpur, however, unbalanced current observed atfer A/r. WBSETCL may share the details.		No	No
64	220KV DALTONGUNJ-GARWAH (NEW)-2	21-04-2023	18:25	21-04-2023	19:44	Daltongunj: R_N, Zone-1, 18.36 km, 3.8 kA	Garawh: R_N, Zone-1, 70.82 km	R-Earth	100	A/r successful. Tripped again in reclaim time		Yes	Yes
65	400KV RANGPO-TEESTA-V-1	21-04-2023	19:25	21-04-2023	20:04	Rangpo:R_N, Zone-2, 12.1 km ,7.8 kA		R-Earth	100	A/r successful. Tripped again within reclaim time		No	No
66	400KV BINAGURI-TALA-4	21-04-2023	21:29	21-04-2023	22:17	Binaguri: B_N, Zone-2, 122.8 km, 3.3 kA		B-Earth	500	Tripped in Zone-2 time from Binaguri.		No	NA
67	220KV BIRPARA-MALBASE-1	21-04-2023	21:42	21-04-2023	22:46	Birpara: Y_N	Malbase: Y_N, Zone-1, 14.9 km, 2.49 kA	Y-Earth	100	A/r couldn't be ascertained from PMU		No	NA

68	400KV PATNA-SAHARSA-1	21-04-2023	21:43	21-04-2023	22:24	Patna: R_N, 20.97 km ,13 kA	Saharsa: R_N, Zone-2, 228.6 km, 2.3 kA	R-Earth	100	A/r failed after 1 second		Yes	Yes
69	400KV BINAGURI-TALA-1	21-04-2023	22:06	21-04-2023	22:33	Binaguri: B_N		B-Earth	2200	Resistive fault		No	NA
70	220KV SAHARSA(PMTL)-BEGUSARAI-1	21-04-2023	23:57	22-04-2023	01:32	Saharsa:R_N, Zone-1, 24.8 km, 1 kA	Begusarai: Zone-1, 54.7 km, Ia=3.19 kA	R-Earth	100	A/r failed after 1 second		No	Yes
71	400KV BINAGURI-TALA-4	22-04-2023	04:40	24-04-2023	21:07		Tala:R_N, 120.6 km, 3.58 kA	R-Earth	500	Tripped in Zone-2 time from Binaguri.		No	NA
72	400KV BINAGURI-KISHANGANJ-1	22-04-2023	04:43	22-04-2023	20:25	Binaguri:R_N, 20.5 km, 5.58 kA	Kishanganj: R_N, 98.6 km, 5.026 kA	R-Earth	100	A/r successful. Tripped again within reclaim time		No	No
73	400KV BINAGURI-TALA-1	22-04-2023	06:03	22-04-2023	08:32	Binaguri:B_N, 1.1 kA		B-Earth	2600	Resistive fault		No	NA

74	220KV KARAMNASHA (NEW)-SAHUPURI-1	22-04-2023	09:02	23-04-2023	04:17	Karamnasha: Didn't trip	Sahupuri: R_B, Ib= 0.32 kA, Ir= 0.3 kA	R-B	100	Line tripped from Sahupuri end only. Y_ph jumper snapped at loc. 06		NA	NA
75	220KV BARUIPUR-SUBHASGRAM(PG)-1	22-04-2023	09:31	22-04-2023	10:17	Baruipur: DT received		No fault	NA	DT received at Baruipur. PG ER-2/WBSETCL may explain.		Yes	NA
76	400KV KHSTPP-LAKHISARAI-1	22-04-2023	13:59	23-04-2023	03:45		Lakshisarai:B_N, 145 km, 3.1 kA	B-Earth	100	A/r failed after 1 second		No	No
77	220KV KATAPALLI-BOLANGIR(PG)-1	22-04-2023	17:04	22-04-2023	17:21	Katapalli:R_N, A/r successful	Bolangir: R_N, Zone-1, 116.7 km, 1.715 kA	R-Earth	100	A/r successful from Katapalli. Three phase tripping at Bolangir		Yes	No
78	220KV PUSAULI(PG)-DURGAUTI-2	23-04-2023	14:42	23-04-2023	20:02	Sasaram: R_N, Zone-1, 7.41 km, 11.69 kA		R-Earth	100	Three phase tripping for single phase fault at Pusauli end.		Yes	No

79	220KV RANCHI-MTPS(DVC)-1	23-04-2023	17:51	23-04-2023	18:30	Ranchi:R_N, 131.5 km, 1.48 kA	Mejia:R_N, Zone-1, 108.59 km, 1.598 kA	R-Earth	100	A/r successful from Ranchi. A/r disabled at Mejia.		Yes	Yes
80	400KV JHARSUGUDA-STERLITE-2	24-04-2023	04:01	24-04-2023	04:58	Jharsugada: R_N, Zone-1, 15.4 km, 14 kA	Sterlite:R_N, Zone-1, 23 kA	R-Earth	100	A/r succesful from Jharsuguda only		Yes	No
81	400KV RANCHI-NEW RANCHI-1	24-04-2023	14:00	24-04-2023	14:16	Ranchi:B_N, 60.73 km, 6.17 kA, A/r successful	New Ranchi: B_N, 25.67 km, 12.295 kA	B-Earth	100	A/r successful from Ranchi. Three phase tripping at New Ranchi		Yes	Yes
82	400KV DURGAPUR-KHSTPP-2	24-04-2023	14:36	24-04-2023	15:57	Durgapur:B_N, 193.6 km, 1.713 kA	Khstpp: B_N, Zone-1, 25.79 km, 11.34 kA	B-Earth	100	A/r kept in non-auto mode to facilitate shutdown of Ckt.1		No	No
83	400KV MAITHON-RANCHI-1	24-04-2023	17:43	24-04-2023	18:22	Maithon: Y_N, 5.2 km, 13.03 kA	Ranchi:Y_N, 199.2 km, 2.06 kA	Y-Earth	100	A/r kept in non-auto mode for PID testing		No	Yes

84	400KV PUSAULI(PG)-DALTONGANJ-1	24-04-2023	22:10	25-04-2023	11:41	Pusauli: B_N, 4.8 km, 13.5 kA	Daltonganj: B_N, 196 km, 1.7 kA	B-Earth	100	A/r successful. Tripped again within reclaim time		Yes	Yes
85	400KV NABINAGAR (NPGC)-JAKKANPUR(BH)-2	24-04-2023	23:09	25-04-2023	00:59	Nabinagar: R_N, 2.5 km, 2.5 kA	Jakkanpur: R_N, 120.6 km	R-Earth	100	A/r couldn't be ascertained from PMU		No	No
86	400KV NABINAGAR (NPGC)-JAKKANPUR(BH)-1	24-04-2023	23:09	25-04-2023	00:45	Nabinagar: R_N	Jakkanpur: R_N, A/r successful	R-Earth	100	A/r successful from Jakkanpur. Details may be shared by NPGC/BGCL		No	No
87	400KV GAYA-KODERMA-2	27-04-2023	05:21	27-04-2023	06:24	Gaya: B_N, 78.017 km, 4.544 kA, A/r successful	Koderma: B_N, 58 km, 6.63 kA	B-Earth	100	A/r successful from Gaya after 1 second. From Koderma, A.r successful after 1.5 second. However, all three phase tripped from Koderma after 2 seconds. DVC may explain.	DR length less at Koderma	Yes	Yes

88	400KV DURGAPUR-KAHALGAON-1	27-04-2023	11:41	27-04-2023	12:27	Durgapur: B_N, 102.5 km, 2.89 kA, A/r successful	Kahalgaon: B_N, 121.5 km, 3.4 kA	B-Earth	100	A/r successful from Durgapur. Three phase tripping at Kahalgaon		No	No
89	400 KV DURGAPUR-SAGARDIGHI-1	27-04-2023	11:47	27-04-2023	12:52	Durgapur: B_N, 90.6 km, 4.79 kA	Sagardighi: B_N, 66.8 km, 4.39 kA	B-Earth	100	A/r in non-auto mode for OPGW work		No	No
90	400KV ALIPURDUAR (PG)-BINAGURI-4	27-04-2023	17:02	27-04-2023	21:15	Alipurduar: B_N, 57.2 km, 4.36 kA	Binaguri: B_N, 70.19 km, 5.391 kA	B-Earth	100	A/r failed after 1 second		No	No
91	220KV CHUKHA-BIRPARA-1	29-04-2023	01:53	29-04-2023	03:39		Birpara: R_Y, 42 km, Ir: 2.708 kA, Iy: 2.335 kA	R-Y	100	Phase to phase fault		NA	No
92	220KV CHUKHA-BIRPARA-2	29-04-2023	01:53	29-04-2023	03:40		Birpara: R_Y, Zone-1, 42.32 km, Ir: 2.773 kA, Iy: 2.329 kA	R-Y	100	Phase to phase fault		NA	No

93	400KV BINAGURI-TALA-2	29-04-2023	01:59	29-04-2023	02:59	Binaguri:R_N, Zone-1, 125.2 km, 2.8 kA		R-Earth	100	Three phase tripping for single phase fault		No	NA
94	400KV ALIPURDUAR (PG)-JIGMELLING-2	29-04-2023	03:53	29-04-2023	04:30	Alipurduar: R_N, Zone-1, 60.5 km, 6.7 kA	Jimelling: R_N, Zone-1, 125.4 km, 1.59 kA	R-Earth	100	As per PMU, A/r failed after 1 second.		No	NA
95	220KV CHUKHA-BIRPARA-1	29-04-2023	04:10				Birpara: R_B, 55.32 km, Ir: 2.372 kA, Ib: 2.774 kA	R-B	100	Phase to phase fault		NA	No
96	220KV CHUKHA-BIRPARA-2	29-04-2023	04:10	29-04-2023	09:56	Chukha: R_B, Zone-1, 54.2 km, Ir= 2.447 kA, Ib= 2.739 kA	Birpara: R_B, Zone-1, 53.98 km, Ir= 2.482 kA, Ib= 2.758 kA	R-B	100	Phase to phase fault		NA	No

97	400KV KOLAGHAT-NEW CHANDITALA-1	29-04-2023	15:07	29-04-2023	16:05	Kolaghat: R_N, Zone-2, 51.69 km, 4.293 kA	New chanditala: R_N, Zone-1, 5.85 km, Ir= 15.07 kA	R-Earth	100	A/r couldn't be ascertained from PMU		No	No
98	220KV TTPS-TSTPP-1	29-04-2023	18:21	29-04-2023	19:20	TTPS: B_N, 21.09 km, 4.78 kA	TSTPP: B_N, Zone-1, 6.89 km, 10.89 kA	B-Earth	100	A/r couldn't be ascertained from PMU		No	No
99	400KV ALIPURDUAR (PG)-PUNASANGCHUN-2	30-04-2023	00:28	30-04-2023	01:41	Alipurduar: R_N, 83.7 km, 3.34 kA, A/r successful	Punasangchu: R_N, 160 km, 1.25 kA	R-Earth	100	A/r successful from Alipurduar only		No	NA
100	400KV BINAGURI-MALBASE-3	30-04-2023	03:04	30-04-2023	03:37	Binaguri: R_N, 113 km, 7.962 kA, A/r successful	Malbase: R_N, 166 km, 1.908 kA	R-Earth	100	A/r successful from Binaguri only		No	NA

101	220KV NEW TOWN(AA-III)-RAJARHAT-1	30-04-2023	13:23	30-04-2023	15:33	New town: B_N, 5.5 km, 14.4 kA	Rajarhat:B_N 0.4 km, 23.42 kA	B-Earth	100	A/r successful. Tripped again within reclaim time		No	No
102	400KV ARAMBAGH-BAKRESWAR-1	30-04-2023	15:09	30-04-2023	16:01	Arambagh:B_N, Zone-1, 33.95 km, 8.54 kA	Bakreswar: B_N, Zone-1, 102.9 km, 2.42 kA	B-Earth	100	A/r kept in non-auto mode for OPGW installation work		No	No
103	220KV NEW TOWN(AA-III)-RAJARHAT-2	30-04-2023	16:03	30-04-2023	16:17	New town: Y_N, Zone-1, 1.07 km, 15.6 kA	Rajarhat:Y_N, Zone-2, 5.9 km, 8.92 kA	Y-Earth	100	A/r successful from Rajarhat only.		No	No
104	220KV PATNA-KHAGAUL-2	30-04-2023	15:56	30-04-2023	16:54	Patna: A/r successful	Khagaul: Y_N, 12.9 km, 7.23 kA	Y-Earth	100	A/r successful from Patna only		Yes	No
105	220KV SAHARSA-BEGUSARAI-2	30-04-2023	15:17	30-04-2023	20:12	Saharsa: B_N, 89.46 km, 1.98 kA	Begusarai: B_N, Zone-1, 1.0436 km, 11.01 kA	B-Earth	100	Details may be shared by BSPTCL/PMTL		No	No

106	765KV FATEHPUR-PUSAULI-1	30-04-2023	19:08	30-04-2023	20:36		Pusauli: B_N, 2.159 kA, 144.6 km	B-Earth	100	Three phase tripping for single phase fault		NA	Yes

Annexure C.4

SL NO	MONTH	UTILITY	ELEMENT	DETAILS OF ELEMENT	REMARKS
1	OCC_NOV_2022	NTPC (North Karanpura)	ICT	660MW New Generating Unit charged a Tandwa,Jharkhand	DATA REQUIRED
2	OCC_NOV_2022	NTPC (North Karanpura)	ICT	400KV MAIN BAY OF 400KV/11.50KV 315 MVA ST-3 AT NORTH KARANPURA	DATA REQUIRED
3	OCC_NOV_2022	NTPC (North Karanpura)	GT-1	400KV MAIN BAY OF 400KV/21KV 265 MVA GT-1 AT NORTH KARANPURA	DATA REQUIRED
4	OCC_NOV_2022	NKTL	T/L	400 kV North Karanpura(NTPC)- Chandwa(PG) Transmission Line -1	PDMS AND PSCT DONE AT NORTH KARANPURA END AND DATA REQUIRED CHANDWA END
5	OCC_NOV_2022	NKTL	T/L	400 kV North Karanpura(NTPC)- Chandwa(PG) Transmission Line 2	PDMS AND PSCT DONE AT NORTH KARANPURA END AND DATA REQUIRED CHANDWA END
6	OCC_NOV_2022	JUSNL	T/L	400KV MAIN BAY OF LATEHAR(JUSNL)-1 AT CHANDWA(PG)	PDMS AND PSCT DONE AT CHANDWA END AND DATA REQUIRED AT LATEHAR END
7	OCC_NOV_2022	JUSNL	T/L	400KV MAIN BAY OF LATEHAR(JUSNL)-2 AT CHANDWA(PG)	PDMS AND PSCT DONE AT CHANDWA END AND DATA REQUIRED AT LATEHAR END
8	OCC_DEC_2022	BGCL	ICT	400KV MAIN BAY OF 400KV/220KV/132kV/33kv 500 MVA ICT 2 AT JAKKANPUR JIS	PDMS AND PSCT DONE
9	OCC_DEC_2022	PGCIL	ICT	400KV MAIN BAY OF 400KV/220KV/33kV 315 MVA ICT 2 AT DURGAPUR SS	DATA REQUIRED
10	OCC_JAN_2023	JUSNL	T/L	400 kV Chandwa (PG) - Latehar (JUSNL) D/C Line	PDMS AND PSCT DONE AT CHANDWA END AND LATEHAR END DATA REQUIRED
11	OCC_JAN_2023	BSPTCL	T/L	220 kV Patna (PG) - Sipara (BSPTCL) D/C Line after re conductorin	PDMS AND PSCT DONE
12	OCC_JAN_2023	OPTCL	B/R	400 kV 125 MVAr Bus Reactor at Mendhasal GSS	PDMS AND PSCT DONE
13	OCC_JAN_2023	NTPC	T/L	Main Bays of 400 kV Gaya D/C Line at NTPC sitchyard	DATA REQUIRED
14	OCC_JAN_2023	BSPTCL	T/L	132kV Ganwara-Pandaul line(reconducting)	PDMS AND PSCT DONE
15	OCC_JAN_2023	BSPTCL	T/L	132kV Darbhanga-samastipur line(reconducting)	PDMS AND PSCT DONE
16	OCC_JAN_2023	PGCIL	T/L	PG-Patna-Gaurichak TL CKT-2(reconducting)	PDMS AND PSCT DONE
17	OCC_JAN_2023	PGCIL	T/L	PG-Patna-Gaurichak TL CKT-1(reconducting)	PDMS AND PSCT DONE
18	OCC_JAN_2023	BGCL	T/L	220kV JAKKANPUR NEW(BGCL)-KHAGAUL(BSPTCL)	PDMS AND PSCT DONE
19	OCC_JAN_2023	BGCL	T/L	220kV JAKKANPUR NEW(BGCL)-SIPARA(BSPTCL)	PDMS AND PSCT DONE
20	OCC_JAN_2023	BSPTCL	T/L	132kV Dumraon-Bikramganj line(reconducting)	PDMS AND PSCT DONE
21	OCC_JAN_2023	OPTCL	B/R	125kva bus reactorat Mendhasal	PDMS AND PSCT DONE
22	OCC_JAN_2023	OPTCL	ICT	132/33kV 20MVA Power TRF-1 AT Lapanga	PDMS AND PSCT DONE
23	OCC_JAN_2023	OPTCL	ICT	132/33kV 20MVA Power TRF-II ATGIS Hinjili	PDMS AND PSCT DONE
24	OCC_FEB_2023	PGCIL	T/L	220 kV Pusauli (PG) - Durgauti (IR) D/C Line	Data required in both end
25	OCC_FEB_2023	OPTCL	ICT	132/33kV 20MVA Power TRF-1 AT ASKA NEW	Data required
26	OCC_FEB_2023	OPTCL	ICT	132kV Barbil-Kamanda line	Data required in both end
27	OCC_FEB_2023	OPTCL	T/L	132kV Switching station kutra 132Kv along with LILO of kuchinda rajgangpur s/c line to kutra	Data required
28	OCC_FEB_2023	OPTCL	T/L	132kV Kutra m/s shiva cement s/c line	Data required
29	OCC_FEB_2023	OPTCL	ICT	132/33kV 20MVA Power TRF-1 AT 132/33 kV,GSS,CHANDIPUR	Data required
30	OCC_FEB_2023	OPTCL	T/L	132kV Switching station near M/s Ultrateh Cement ltd at Khamarnuagaon,Khuntuni,132kV LI	Data required
31	OCC_FEB_2023	OPTCL	T/L	12.5 MW Solar power plant at 33kV Level in 132/33kV witchyard M/S ARBEL having connecti	Data required
32	OCC_FEB_2023	OPTCL	T/L	220kV Switchyard at 220/132/33kV GSS,BAMRA having LILO connectivity 220kV Budhipadar-	Data required
33	OCC_FEB_2023	OPTCL	ICT	220/132kV160MVA Power Auto TRF-1 AT 220/132/33 kV,GSS,BAMRA	Data required
34	OCC_FEB_2023	OPTCL	ICT	220/132kV160MVA Power Auto TRF-2 AT 220/132/33 kV,GSS,KURAMUNDA	Data required
35	OCC_FEB_2023	OPTCL	ICT	220/132kV 40MVA Power Auto TRF-1 AT 220/132/33 kV,GSS,KURAMUNDA	Data required
36	OCC_MAR_2023	NTPC		NTPC Barh Stage Unit #2, 24 kV, 660 MW is yet to be synchronized	Data required
37	OCC_MAR_2023	NTPC	GT(3*260MVA)	400kV GT#2 of NTPC Barh	Data required
38	OCC_MAR_2023	BGCL	ICT-1	400/220/33kV ICT 1 500MVA at Naubatpur SS	Data required
39	OCC_MAR_2023	OPTCL	T/L	400 kV GMR - Meramundali-B S/C Line after LILO work of 400 kV GMR - Meramundali-A Line	Data required
40	OCC_MAR_2023	OPTCL	T/L	132kV 2 PH S/C LINE,132kV GSS,KAMAKHYANAGAR FOR EXTENTION OF P/S TO RTSS KAMAK	Data required
41	OCC_MAR_2023	OPTCL	T/L	400kV GMR-MERAMUNDALI-B SC LINE & MERAMUNDALI-B TO MERAMUNDALI-A LINE AFTE	Data required
42	OCC_MAR_2023	OPTCL	ICT	132/33kV 20MVA POWER TR NO-2 AND 1 132kV FEEDER BAY GSS BIRMAHARAJPUR	Data required
43	OCC_MAR_2023	BSPTCL	T/L	220kV BIHARSARIFF-TTPS S/C(RECONDUCTING)	Data required
44	OCC_MAR_2023	BSPTCL	T/L	132kV SONENAGAR(OLD)-NAGARUNTARI TSS,SCTL(RECONDUCTING)	Data required
45	OCC_MAR_2023	BGCL	ICT	500MVA ICT-1 400/220/132/33kV ,NAUBATPUR	Data required
46	OCC_MAR_2023	BGCL	T/L	132kV KHAGAUL-BIHITA NEW(BGCL) S/L	PDMS AND PSCT DONE AT BIHTA END
47	OCC_MAR_2023	BGCL	T/L	132kVBIHITA NEW(BGCL)-DIGHA(BSPTCL)	PDMS AND PSCT DONE AT BIHTA END
48	OCC_MAR_2023	BSPTCL	T/L	132kV RAJGIR ASTHAWAN CKT1&2	Data required
49	OCC_APR_2023	NTPC	GT	NTPC Barh Stage 1 Unit #2 660MW	DATA REQUIRED
50	OCC_APR_2023	OPTCL	ICT	400KV MAIN BAY OF 400KV/220kV 315 MVA ICT-3 AT KALINGANAGAR	DATA REQUIRED
51	OCC_APR_2023	BSPTCL	T/L	220 kV Sitamarhi (PMTL) - Raxaul Line 1 along with associated bays at Raxaul end	DATA REQUIRED
52	OCC_APR_2023	BSPTCL	T/L	220 kV Sitamarhi (PMTL) - Raxaul Line 2 along with associated bays at Raxaul end	DATA REQUIRED
53	OCC_APR_2023	POWERGRID	T/L	132 kV Ranpo (PG) - Samardong (EPD, Sikkim) Line 1	PDMS AND PSCT DONE AT RANGPO END
54	OCC_APR_2023	POWERGRID	T/L	133 kV Ranpo (PG) - Samardong (EPD, Sikkim) Line 2	PDMS AND PSCT DONE AT RANGPO END

Sl No.	Name of the incidence	PCC Recommendation	Latest status
125th PCC Meeting			
1.	Total Power failure at 400 kV Dikchu S/s on 26.03.2023 at 04:02 Hrs.	PCC advised Teesta III to enable voltage measurement for O/V protection as phase to ground. Further the settings may be set at 110% with delay of 5-6 sec for stage 1 and 120-125 % with delay of 100 ms for stage-2. The settings may be implemented in consultation with ERLDC. Regarding tripping of the line from Teesta III end, PCC advised the Teesta III to review the reach settings of both main-I & main-II relay as per ERPC Protection philosophy in consultation with ERLDC/ERPC. Further it was advised that relay testing may be carried out for main-2 relay (Siemens relay) to check the healthiness of relay.	
2.	Repeated Line tripping of 220 kV Ramchandrapur - Joda in April 2023	Regarding status of commissioning of DTPC in the line, PCC advised the matter may be taken with their telecom wing for early commissioning of the same.	
3.	Bus tripping at Ramchandrapur in April 2023	PCC expressed concern on repeated mal-operation of busbar protection at Ramchandrapur and advised JUSNL to carry out a detail checking of the scheme as well as testing of the busbar protection in coordination with the Relay OEM. PCC further advised to reduce zone 4-time settings of all feeders at Ramchandrapur end to 250 ms till the time busbar is out of service	
124th PCC Meeting			
4.	Total Power Failure at 220 kV Barauni, Hazipur,	It was observed that DRs at Hazipur end is not time synchronized	*No update in 125th PCC Meeting.*

	Amnour and Mokama S/s on 22.02.2023 at 18:11 Hrs	accordingly BSPTCL was advised to rectify it at the earliest.	
5.	Tripping of 400 kV GMR-Meramundali line and Outage of GMR unit 3 on 28.02.2023	PCC advised OPTCL following: • To disable SOTF & TOR in the relay for 400 kV Meramundali-A-Meramundali B line. • Relay OEM may be contacted for reducing the current threshold value in SOTF setting and for implementation of AND condition with manual closing for triggering of SOTF. • To remove T-connection for the lines connected among 220 k V Meramundali A/220 kV Meramundali B & 220 kV Goda, 220 kV Duburi at the earliest. • To implement line differential protection for 400 kV Meramndali A-Meramundali B line.	*OPTCL representtaive was not available in 125th PCC meeting.*