Eastern Regional Power Committee

Minutes of 115th OCC Meeting held on 20th November, 2015 at ERPC, Kolkata

List of participants is at **Annexure-I.**

Item no. 1: Confirmation of minutes of 114th OCC meeting of ERPC held on 16.10.2015

The minutes were uploaded in ERPC website and circulated vide letter dated 05.11.15 to all the constituents.

ERLDC requested for correction in Item no. B26 which was recorded as follows:

"ERLDC informed that as per the regulation OPTCL has to give declaration certificate in form-B after getting the approval from Electrical Inspectorate for antitheft charging of lines 66kV and above.

OPTCL agreed to comply."

Deliberation in Item No. B.26 as recorded in the meeting is modified as follows:

"ERLDC informed that as per CEA regulations and clarifications from the Electrical Inspectorate, CEA, an owner may antitheft charge a line portion after obtaining undertaking from the owner regarding compliance of all regulatory provisions. The format for such undertaking is the B5 format which has already been circulated earlier. Also, format B2 regarding protection compliance is to be submitted. Only after submission of the formats B2, B5 would OPTCL be permitted to antitheft charge the lines from meramundali end. Regarding antitheft charging by tapping from lines of 66kV class and above, it was intimated that sub regulation(6) of regulation 44 needs to be complied with and the matter needs to be taken up with the Chief Electrical Inspector for his consideration.
OPTCL agreed to comply."

Members may confirm the minutes with above amendment.

Deliberation in the meeting

Members agreed for above amendment for Item No. B.26.

Further, ERLDC requested for amendment of the last para of Item No. B.25.

OCC agreed to amend the last para of Item No. B.25 which is as given below—

"After detailed deliberation, OCC agreed to the proposal of bus split operation of 132 kV Rangpo and advised Powergrid to take up the issue with CTU for implementation of the scheme at the earliest."

With the above amendments under Item No. B.25 & B.26 members confirmed the minutes of 114th OCC Meeting.

PART A

(List of Items to be discussed for which the details are given at "Part B")

B.1. Handing over of 2 nos 132 kV bays at 400/220/132 kV Kuchei (Baripada) Grid S/s in Odisha.
B.2. Furnishing of data for Electricity Generation Targets for the year 2016-17
B.3. Preparation of Load Generation Balance Report (LGBR) of ER for 2016-17
B.4. Availability Declaration and Power Scheduling of MPL
B.5. Status of UFRs healthiness installed in Eastern Region
B.6. Healthiness of SPS existing in Eastern Region
B.7. Installation of polymer insulators on New Transmission lines
B.8. Status of Islanding Schemes of Eastern Region
B.9. 11KV Auxiliary power supply of Powergrid Substation
B.10. On-site Protection Audit by the Consultant to conduct the study/ Analysis to ensure Secure and Reliable Operation of National Grid – Submission of Formats
B.11. Commissioning of 400 kV Ind-Bharath to Jharsuguda D/C (dedicated line)
B.12. Status of PLCC system installed in Eastern Region
B.13. Testing of SEM type L&T Meters
B.14. Erroneous recording of data by Interface Meters
B.15. Non Receipt of SEM data from Various Locations
B.16. Status update of previous decisions/follow up actions
B.17. Third Party Protection Audit
B.18. Preparation of crisis management plan for Cyber Security in Power Sector in line with CERT-IN
B.19. Certification through BIS as per IS 18001:2007 to all generating/ transmission units
B.20. Energy Generation data management from Renewable Energy Sources
B.21. Sub-committee on "Integration of Renewable Energy Sources".
B.22. Data of Peak Demand
B.23. Pollution mapping for Eastern Region
B.24. Network & Chuzachen SPS review proposal in view of reduced NOC – Chuzachen
B.25. Antitheft charging of lines from Meramundali end
B.26. Agenda related to Dynamic data of Generator Models required in PSSE for Simulations
B.27. Auto-Reclose (A/R) scheme of 400kV Jeypore- Gajuwaka D/C line
B.28. Mock Black start exercises in Eastern Region
B.29. Restoration of SCADA data
B.30. Restricted Governor Mode of Operation
B.31. Reactive Power performance of Generators and GT tap position optimization

PART B

(Items to be discussed as listed in "Part A")

Item No. B.1: Handing over of 2 nos 132 kV bays at 400/220/132 kV Kuchei (Baripada) Grid S/s in Odisha.

As discussed in the Standing Committee meeting held in New Delhi on 08.02.2012, OPTCL has been allotted 4 nos. 132 kV bay at Kuchei Grid S/s in Odisha. During site visit by OPTCL for connection of 2 nos.132kV feeders from Kuchei –Jaleswar line, there is not sufficient space for termination. It was noticed that 2 nos. equipped 132kV bay meant for Jharkhand is available at Kuchei S/s lying un-utilised and is learnt that the same bays shall not be used in near future. It was also informed that JUVNL, is yet to construct 132kV line that will be connected with these 2 nos. bay. Since these 2 nos. bay cannot be used by Jharkhand and the guarantee period of equipment / materials will expire, it is better OPTCL, can immediately use these bays for its line, which is going to be completed within next 3 to 4 months.

During 110th OCC meeting at Kolkata, this issue of allotment of bays was discussed and it was opined that consent of JUVNL, may be accorded for handing over the 2 nos. 132kV bays to OPTCL. In view of this, JUSNL is requested to communicate their consent for sparing the 2 nos. bays meant for JUVNL to OPTCL for better utilization of the existing equipments in the bay within its guarantee period.

In 114th OCC, JUSNL informed that the issue was discussed at higher level meeting wherein JUVNL is in favor of handing over the two 132kV bays to Odisha.

OCC requested ERPC Secretariat to pursue the issue with MD, JUSNL.

The issue has been placed in 31st TCC/ERPC Meeting to be held on 13th November 2015.

JUSNL/OPTCL may update.

Deliberation in the meeting

It was informed that in 31st TCC/ERPC meetings, JUSNL accepted the proposal of OPTCL.

Item No. B.2: Furnishing of data for Electricity Generation Targets for the year 2016-17

You are aware that the annual exercise of assessment and finalization of the generation targets and the planned maintenance schedules of the generating units for the year 2016-17 is being initiated by CEA. Although the generation performance of the various stations and their planned & unscheduled outages are regularly monitored in CEA but it is felt that a more realistic projection of month-wise generation in the coming year could be made by the respective Station Authorities.

While monitoring the generation performance during the current financial year, it has been observed that power utilities are facing the problem of loss of generation due to no / low schedules and losses accounted on other technical and commercial egresses. Accordingly, it is requested that the following inputs may kindly be submitted to this office as per the enclosed **Annexure**:

i) **(Annex- I (point no. 1 to 5))** The unit-wise proposed generation during 2016-17 (monthly and yearly) along with anticipated generation during 2015-16, the anticipated loss of generation on account of various constraints (e.g. Grid Constraints/ Low schedules/ Reserve shut down /high fuel cost) may be accounted and furnish with necessary details. The details of units like boiler/ turbine make, date of commissioning etc may also be furnished.

ii) (**Annex –I (point no. 6))** Utilities who have their Power Purchase Agreement (PPA) with various Discoms, Trader, states etc. and the details may be furnished in MW for Long and Medium term Agreement for assessing the expected generation for next year.

iii) (**Annex- I (point no 7 (a) and (b)**) The details of coal linkages from coal agencies and availability of gas/ liquid fuel.

iv) **(Annex – I (point no. 8))** Unit wise cost of generation and rate of sale of power.

v) (**Annex- II**) Detailed unit-wise schedule of Planned Maintenance (approved by the respective Regional Power Committees) and R&M to be carried out during 2016-17 may also be furnished.

The information may please be furnished electronically at the email address **targetopmcea@gmail.com, kiran.meena@nic.in** with a copy to ERPC (e-mail: **mserpc-power@nic.in**) latest by **31st October, 2015**.

For any inconvenience in submission of data you may contact Mrs. Kiran Meena, Assistant Director, CEA, Ph- 011-26732684, Mob.08588831051 or write to the following address:

Chief Engineer (OPM Division),
Room No.604 (N), Central Electricity Authority,
Sewa Bhawan, R.K. Puram, New Delhi-110066
Ph. 011-26105026 (Telefax)

For your convenience the input formats are also being made available at CEA website **http://www.cea.nic.in** in **Whats New/ Flash News** and ERPC website **www.erpc.gov.in.**

In 114th OCC, all constituents were advised to submit the requisite data electronically by mail as mentioned above latest by 31st October, 2015.

All the constituents agreed to submit.

NTPC Farakka, TSTPS-Kaniha, OHPC, DPL and DGPC have submitted the relevant information.

Other constituents may comply.

Deliberation in the meeting

OPGC, WBPDCL, WBSEDCL and DVC agreed to furnish the data by end of November, 2015.

OCC requested all the other constituents to furnish the data along with the LGBR data.

Item No. B.3: Preparation of Load Generation Balance Report (LGBR) of ER for 2016-17

As per the IEGC under Clause 5.7.4 of Principal Regulations, first amendment in 2012 under sub-Regulation (a), (b), (c) and (d) states that

a) "The RPC Secretariat shall be primarily responsible for finalization of the Annual Load Generation Balance Report (LGBR) and the annual outage plan for the following financial year by **31st December of each year**. The LGBR shall be prepared by the respective RPC Secretariat for Peak as well as Off-peak scenarios".

b) "Each SLDC shall submit LGBR for its control area, for Peak as well as Off-Peak scenario, by **31st October** for the next financial year, to respective RPC Secretariat".

c) "RPC Secretariat shall then come out with draft LGBR and draft outage plan for the next financial year by **30th November** of each year for the regional grid taking …."

d) "The outage plan shall be finalized in consultation with NLDC and RLDCs. The final LGBR after considering comments/observations of the stakeholders shall be prepared by RPC Secretariat by **31st December of each year**. The……"

So, the planning of maintenance of generating units of various generating companies of the region as well as outage of transmission system on annual basis in respect of Eastern Region for the year 2016-17 is to be finalised by **31st December, 2015**. To facilitate the preparation of LGBR of Eastern Region by ERPC Secretariat within the above schedule period, the following data/ information for the year **2016-17** in respect of the constituents/ generators of Eastern Region is required:

State and Central Sector Generators/ IPPs/CPPs

i) The unit wise and station wise monthly energy generation proposed from existing units during 2016-17 (thermal/hydro/RES).

ii) Annual maintenance programme for each of the generating units (thermal and hydro both).
iii) Generating units under R&M/ long outage indicating date of outage and reasons of outage and expected date of return (thermal and hydro both).
iv) Partial and forced outage figures (in %) of generating units for the last 3 years.
v) Month wise peak demand (MW) – restricted and unrestricted peak demand.
vi) Month wise energy requirement (in MU).
vii) Schedule of commissioning of new generating units during 2016-17 and unit-wise monthly generation programme (in MU).
viii) Allocation of power from new generating units.

CTU / STU / Powerlinks / ENICL

Month wise annual planned outage of transmission systems (Transmission lines 220kV and above/ICTs/Reactors/other elements).

It is therefore requested to please send the above information (as applicable) on or before **31.10.2015** for compilation of data and preparation of **LGBR of ER for the year 2016-17.**

Information should be submitted in the form of soft copy through email (mail ID: **rpc.erpc@gov.in / mserpc-power@nic.in**).

In 113th OCC, the house was informed that LGBR for the year 2016-17 at ERPC Secretariat needs to be finalized by 31st December, 2015. So, all the utilities have to submit the relevant data pertaining to their system as given above.

OCC advised all constituents to submit the relevant information by 31st October 2015 without fail. All constituents agreed to submit.

Powergrid ER-I, OPTCL, DVC, WBSETCL and GMR have submitted the relevant information.

Other constituents may submit the data for LGBR by 31.10.2015.

Deliberation in the meeting

JUSNL, NTPC-TSTPS, CESC and Sterlite submitted the requisite data.

BPTCL, OPGC, WBPDCL, WBSEDCL and TVNL agreed to furnish the data by end of November, 2015.

OCC requested all the other constituents to furnish the data latest by 30th November, 2015.

Item No. B.4: Availability Declaration and Power Scheduling of MPL--MPL

ERLDC vide its letter no ERLDC/OA/2012 dated 5th October 2012 has denied scheduling MPL power citing the following reasons:

- MPL has part of its full capacity tied under LT PPA and allocations are in MW and not in percentage terms.
- CERC has determined the tariff of a part of the Capacity.
- Long term contracts entered into by MPL with its beneficiaries are bilateral in nature.

MPL has now secured its entire capacity of 1050 MW in long term PPA and CERC has determined tariff for the entire capacity of 1050 MW vide their order no 274/2010 dated 19th November 2014.

In view of the above, MPL has requested ERLDC in its letter dated 26th August 2015 to schedule its power and certify its availability as is done in case of other ISGS.

Members may discuss.

Deliberation in the meeting

MPL was not present in the meeting.

OCC took serious note of non-representation by MPL.

However, DVC and WBSEDCL, as beneficiary of MPL, responded that MPL is having LTA for full quantum of power and the tariff of whole plant (i.e. 1050 MW) was determined by CERC. So, scheduling of MPL may be done at par with other ISGS stations.

ERLDC pointed that the allocation of MPL power is not in percentage-wise (like ISGS stations) rather it is in MW-wise. So it is difficult to calculate percentage-wise allocation for MPL units in case of any back down or shutdown of units.

OCC advised that MPL should approach CEA/CERC/MoP for further clarification on the issue along with percentage-wise allocation of MPL power.

Further, OCC advised all the beneficiaries of MPL, if they want, to give their consent letters to ERPC secretariat so that it can be forwarded to CEA for issuing the percentage-wise allocation for MPL power.

Item No. B.5: Status of UFRs healthiness installed in Eastern Region

UFR Healthiness Certification for the month of October, 2015 has been received from OPTCL, DVC and WBSETCL.

JUSNL and BSPTCL may update.

Deliberation in the meeting

CESC, JUSNL and BSPTCL submitted the healthiness certificate of UFRs for the month of October, 2015. The healthiness certificates of UFRs for the month of October, 2015 are given at ***Annexure-B.5***.

Item No. B.6: Healthiness of SPS existing in Eastern Region

In 114th OCC, NTPC informed that date for testing the SPS should be fixed in monthly OCC meetings and ERLDC should coordinate with all the constituents involved in SPS testing.

After detailed deliberation, OCC decided the following for checking the healthiness of "SPS for tripping of HVDC Talcher-Kolar" :

- The SPS healthiness checking to be carried out in 2nd week of every month.
- NTPC to fix a date in 2nd week of a month and communicate to ERLDC with copies to all concerned.
- ERLDC will co-ordinate with all the constituents for carrying out the SPS healthiness checking.
- Respective constituent should place the status in every OCC meeting.

NTPC, Powergrid, SSL, GMR & JITPL agreed.

SPS healthiness certificate for the month of October, 2015 has been received from Chuzachen, SSL, GMR.

Members may update the status.

Deliberation in the meeting

Powergrid-Odisha, JITPL and CESC submitted the SPS healthiness certificate for the month of October, 2015.

NTPC informed that they have requested given their date for SPS healthiness checking to ERLDC for their consent.

ERLDC informed that the same was forwarded to NLDC and NTPC will get the consent.

OCC advised Powergrid, ER-II and NTPC to submit the SPS healthiness certificate after completion of SPS checking.

Item No. B.7: Installation of polymer insulators on New Transmission lines

In the 30th ERPC Meeting held on 20.06.2015, Powergrid representative delivered a brief presentation highlighting the benefits of Polymer insulators vis-à-vis porcelain/anti-fog disc type insulators mainly on account of high number of trippings of transmission lines due to flashover of insulators.

Powergrid proposed the scheme for new transmission lines as well as the existing ones and at the same time assured that there would be no extra financial burden on the constituents for replacement of the insulators.

Powergrid was advised to submit a detailed roadmap for implementation of this scheme along with other requisite details.

In 113th OCC, Powergrid ER-I has submitted the tentative schedule of replacement work.

OCC advised Powergrid to submit the detail schedule inclusive of time required for replacement etc. so that the same may be put up for further discussion and approval.

In 114th OCC, Powergrid ER-II has submitted the tentative schedule of replacement and informed that they are planning to start the replacement of insulators work with 220kV Birpara-Salakati D/C line in December, 2015.

OCC decided to discuss the shutdown of the line in next OCC meeting in November, 2015 and advised Powergrid to place the shutdowns in every OCC.

OCC referred the commercial issues to next Commercial sub-Committee meeting.

Members may discuss the shutdown of 220kV Birpara-Salakati D/C.

Powergrid-Odisha may place the tentative schedule of replacement.

Deliberation in the meeting

Powergrid- Odisha submitted their schedule of insulator replacement which is given at ***Annexure-B.7****.*

OCC agreed to discuss the shutdown of 220kV Birpara-Salakati D/C along with the shutdown of elements under Item No. C.1.

Further, OCC decided to refer the commercial issues of line shutdowns for insulator replacements to next Commercial Committee meeting.

Item No. B.8: Status of Islanding Schemes of Eastern Region

B.8.1: Status of commissioned Islanding Schemes in Eastern Region

At present, the following islanding schemes are in service:

1. CESC as a whole Islanding Scheme, CESC
2. BkTPS Islanding Scheme, WBPDCL
2. Tata Power Islanding Scheme, Haldia
3. Chandrapura TPS Islanding Scheme, DVC

In 108th OCC meeting, respective constituents agreed to certify that the islanding schemes under their control area are in service on monthly basis.

The healthiness certificate for Islanding Scheme for October 2015 was received from BkTPS, Tata Power and DVC.

Members may update.

Deliberation in the meeting

CESC submitted the healthiness certificate for Islanding Scheme for the month of October, 2015.

B.8.2: FSTPS Islanding Scheme, NTPC

In 113th OCC, NTPC informed that cable laying for implementation of islanding scheme was completed. Cable termination for bay wise breaker trippings and unit-linked wirings is in progress and will be completed by 30.09.2015.

In 114th OCC, Powergrid informed that the work is expected to be completed by 31st December, 2015.

Powergrid/ JUSNL may update the status.

Deliberation in the meeting

Powergrid informed that the PLCC panels will be delivered by Deember, 2015 and Battery and Charger by January, 2016.

B.8.3: Bandel Islanding Scheme, WBPDCL

In 23rd TCC technical feasibilities of new Islanding schemes on Bakreswar and Bandel TPS of WBPDCL were placed and approved.

In 30th TCC meeting, WBPDCL informed that four numbers of old units (each of 60 MW) at Bandel TPS required to be renovated for implementation of islanding scheme. Unit#5 of Bandel TPS is having capacity of HP, LP bypass of 30% and it is under renovation. However, further detail deliberation is required for implementation of the scheme.

TCC advised secretariat to discuss the technical details of the scheme again in the lower forum of ERPC.

In 112th OCC, WBPDCL delivered a presentation for the Islanding scheme in Bandel TPS.

After detailed deliberation, OCC felt that with single unit (unit#5 of 250 MW), the islanding scheme is difficult to survive. However, OCC referred the issue to PCC for further discussion.
In 35th PCC, WBPDCL explained the islanding scheme with a presentation.

In 35th PCC, during deliberation PCC felt that with 30 % HP-LP bypass and such huge load variation (from 225 MW to 105 MW) of load considered for islanding scheme between peak & off-peak and summer & winter conditions, the success of survival of island will be very less. In addition, the load considered are from 4/5 stations and it will be difficult to make island with only UFR operated relays. The communication system should be fibre optic or any specific communication channel.

After detailed deliberation, PCC advised WBSETCL and ERLDC to check whether the islanding scheme can be put into service specifically for peak periods or more load stations can be added in off-peak conditions.

In 114th OCC, WBSETCL informed that adding more load stations during off-peak conditions is a difficult task with such huge seasonal variation in load and it is not possible without manual intervention of grid operator.

After detailed deliberation, OCC felt that Bandel Islanding Scheme could be implemented for grid security meant for peak periods only and accordingly advised WBPDCL to initiate the implementation.

The islanding scheme has been placed before 31st TCC Meeting for further concurrence.

Members may update.

Deliberation in the meeting

It was informed that in 31st TCC/ERPC meetings, members agreed and advised WBPDCL to go ahead with the implementation of islanding scheme.

OCC advised WBPDCL/WBSETCL to place the tentative roadmap for implementation of Bnadel Islanding Scheme.

WBPDCL/WBSETCL agreed to place the tentative roadmap by next OCC.

Item No. B.9: 11KV Auxiliary power supply of Powergrid Substation.

a) 11KV Aux. power supply at 400/220KV Patna Substation:

In 112th OCC, BSPTCL informed that the issue is being considered and they are exploring to give 33 kV supply from 220/132/33 kV Sipara GSS with existing load of 420 KVA (which is lesser than 1000 KVA load for getting 33 kV supply) as a special case.

OCC advised BSPTCL & Powergrid to interact & settle the issue.

In 113th OCC, Powergrid informed that the issue was not yet settled and a discussion with higher authority of SBPDCL is in progress.

In 114th OCC, BSPTCL informed that load requirement at Patna and Biharsharif S/s of Powergrid are very low for getting 33 kV supply however it may be considered as special case if intervened at higher level at SBPDCL.

OCC advised Powergrid to interact with higher authority of SBPDCL for getting 33 kV supply at Patna and Biharsharif S/s of Powergrid as a special case.

Powergrid/BSPTCL may update.

Deliberation in the meeting

Powergrid informed that the matter is still pending at SBPDCL/BSPTCL.

OCC advised Powergrid to interact with BSPTCL and SBPDCL on the issue.

b) Auxiliary power supply for 400KV Berhampore Powergrid Substation--Powergid

As per Practice, 400KV Substation should have two nos auxiliary power supplies from two different sources. Accordingly, an application had been sent to WBSEDCL for arrangement of 11kV dedicated feeder from nearby Nabagram & Sagardighi Substations on deposit basis for the auxiliary supply of 400KV Berhampore Substation.

The construction of 11kV dedicated feeder from Nabagram has been completed and at present auxiliary power supply of Berhampore Substatiion is met from the said feeder. However, the reliability and availability of auxiliary supply from the Nabagram feeder is very poor.

Berhampore is a very important station of POWERGFRID, feedeing power to Bangladesh and West Bengal. The reliability and availability of 11KV auxiliary supply is very much essential for the reliable operation of Berhampore Substation.

WBSEDCL to maintain the reliability and availability of 11KV Nabagram feeder used for supplying auxiliary supply to Berhampore Substatioon and construct the dedicated Sagardighi feeder as second source of auxiliary supply to Berhampore Substation.

In 114th OCC, Powergrid was advised to interact with Director (Dist), WBSEDCL.

Powergrid may update.

Deliberation in the meeting

OCC advised Powergrid to interact with Director (Dist), WBSEDCL.

Item No. B.10: On-site Protection Audit by the Consultant to conduct the study/ Analysis to ensure Secure and Reliable Operation of National Grid – Submission of Formats.

Second Grid Study Committee (GSC) meeting was held at NLDC, New Delhi on 16th July, 2015 to finalize the modalities for implementation of the review of protection audit by the joint venture of M/s Tractabel, Romania, M/s Tractabel, India and M/s Lehmeyer International Private Limited, India. In the meeting, it was decided that M/s Tractabel will carry out the on site Protection audit of the 15 shortlisted substations of the Eastern Region.

The consultant also submitted the format of checklist and a format of bus bar and breaker failure protection details to be filled up by the respective constituents. The formats are already circulated to respective nodal officers vide letter dated 31-07-2015 and the softcopy of the format is also available in ERPC website **www.erpc.gov.in.**

Nodal officers are requested to fill the audit checklist of your respective substation as per the format available in ERPC website and submit to GM, NLDC and CE(GO), CEA with a copy to ERPC Secretariat by 17th August, 2015 so that M/s Tractabel can start the proceedings for on site protection audit of Eastern Region.

Subsequently, Powergrid ER-II, WBSETCL, DVC, BSPTCL, OPTCL and OHPC have submitted the required data.

In 113th OCC, Member Secretary, ERPC informed that the audit may start from November, 2015. So, ERPC have to submit all the requisite data to consultants by the end of September, 2015.

Subsequently, JUSNL submitted the required data.

In 114th OCC, Powergrid ER-II & Powergrid-Odisha has submitted the requisite information.

Powergrid ER-I agreed to submit the requisite information within a week.

Powergrid ER-I may submit the requisite information.

Deliberation in the meeting

It was informed that Powergrid ER-I has submitted the requisite information to NLDC.

Item No. B.11: Commissioning of 400 kV Ind-Bharath to Jharsuguda D/C (dedicated line)

In 114th OCC, Ind-Barath updated the status as follows:

- 121 towers foundations out of total 125 towers have been completed and 118 have been erected.
- Stringing work of 31.015 km out of 42 km line has been completed.
- The bay work at 400 kV Jharsuguda (Kenapalli) S/s is in advanced stage, being executed under the consultancy of Powergrid, will be completed ahead of line.
- Line is expected to be commissioned by November, 2015.
- The unit is also expected to be stabilized by November, 2015.

Ind-Bharath may update the status.

Deliberation in the meeting

Ind-Bharath vide mail dated 20.11.2015 has updated the status as follows:

- *All the 125 towers foundations have been completed and 118 have been erected.*
- *Due to route alignment one tower (i.e. 126th tower) has been increased which is under ROW negotiation.*
- *Stringing work of 32 km out of 39.74 km line has been completed.*
- *The bay work at 400 kV Jharsuguda (Kenapalli) S/s is in advanced stage, being executed under the consultancy of Powergrid, will be completed ahead of line.*
- *Line is expected to be commissioned by December, 2015.*

The detail status as submitted by IBEUL for unit synchronisation and line is given at ***Annexure-B.11****.*

Item No. B.12: Status of PLCC system installed in Eastern Region

In 30th TCC/ERPC, Powergrid agreed to restore the PLCC system at both ends (its own end as well as the constituent end) of a line wherein the other ends are not operational for some reasons or others as one time job.

111th OCC advised Powergrid to place their requirement along with cost estimate as per the Powergrid norms.

Powergrid (ER-I) vide letter dated 09.10.2015 has submitted the details for tie lines of Bihar and Jharkhand.

In 114th OCC, Powergrid ER-II has submitted the details of their control area. The details as submitted by Powergrid ER-I & ER-II**.**

Subsequently, Powergrid-Odisha has submitted the details vide letter dated 6th November, 2015.

Members may decide.

Deliberation in the meeting

OCC requested all the constituents to go through the details of their respective control area and give their comments/suggestion, if any, by next OCC.

The consolidated details of PLCC replacement as given by Powergrid is placed at ***Annexure-B.12****.*

Item No. B.13: Testing of SEM type L&T Meters ---GMR

GMR vide mail dated 09-11-2015 informed that all the energy meters of SEM type L&T make provided by PGCIL should be tested and certified by PGCIL once in a year.

Members may discuss.

Deliberation in the meeting

It was informed that testing is done once in every 5 years and on time it will be done.

Item No. B.14: Erroneous recording of data by Interface Meters ---ERLDC

i. Lakhisarai(BSPHCL)

SEM data received from Lakhisarai(BSPHCL) of 132 KV Lakhisarai(BSPHCL) – Lakhisarai (PG)-1 line showing erroneous(reversed polarity as compared to PGCIL end) since installation of SEM at BSPHCL end in the month of September 2014. The matter is already informed to the official of BSPHCL and also discussed in 30th CC meeting & 30th TCC/ERPC meeting. However the problem still persists.

BSPHCL may update.

Deliberation in the meeting

BSPTCL informed that the issue will be taken up at the earliest and resolved.

ii. Lalmatia(JUVNL)

SEM data received from Lalmatia (JUVNL) of 220 KV Lalmatia(JUVNL) – Farakka (NTPC) line showing erroneous(2/3rd reading as compared to Farakka end) since last six months. The matter is already informed to the official of JUVNL. However the problem still persists.

JUVNL update.

Deliberation in the meeting

JUSNL informed that the issue will be taken up at the earliest and resolved.

Item No. B.15: Non Receipt of SEM data from Various Locations ---ERLDC

i. Kharagpur in WB

SEM data of Kharagpur (WBSETCL) of 400 KV Kharagpur(WB)– Baripada(PG) line is not being received by ERLDC since 1st week of July 2015. It was gathered that the meter has got hanged. Powergrid and WBSETCL were requested by ERLDC to Rectify/replace the meter. The above matter was last discussed in 30th CC meeting. Till now no action has been taken.

Powergrid and WBSETCL may update.

Deliberation in the meeting

It was informed that the problem has been resolved.

ii. Mejia and DSTPS in DVC

SEM data of main meter (i.e NP-6557-A) at Mejia (DVC) of 400 KV Mejia (DVC)– Maithon(PG) line and Check meter (NP-6525-A) at DSTPS end of 400 KV Jamshedpur Line-1 is not being received by ERLDC since last 4 weeks. The meter is neither reporting in AMR system nor through DCD. Powergrid and DVC were intimated about the problem and ERLDC requested to Rectify/replace the meter. Till now no action has been taken.

Powergrid and DVC may update.

Deliberation in the meeting

DVC informed that the meter at their end is all right.

iii. Check Meter at RTPS in DVC

SEM data of Check meter (i.e NP-7533-A) at RTPS Raghunathpur (DVC) of 400 KV RTPS (DVC)– Ranchi(PG) line is not being received by ERLDC since last 15 days. The meter is neither reporting in AMR system nor through DCD.

Powergrid and DVC may update.

Deliberation in the meeting

Powergrid informed that one meter is defective and will be replaced within a week.

iv. Barh NTPC

SEM data of Check meter (i.e NP-7439-A) installed at Barh NTPC end of 400 KV Patna Line-4 is not being received by ERLDC since last 2 months. It was gathered from Barh that the meter has got defective and will be replaced soon. Till now no action has been taken.

Powergrid and NTPC may update.

Deliberation in the meeting

NTPC informed that meter has been received; it will be replaced soon.

v. Kishanganj in BSPTCL

SEM (NP-6085-A) data of Kishanganj(BSPTCL) of 132 KV Kishanganj(BSPTCL) Dalkhola(Wb) line is not being received by ERLDC since last 3 weeks. The meter was data were earlier being downloaded through AMR. After problem in AMR system the same data is not being sent by BSPTCL downloaded through DCD. Kishanganj was intimated about the problem. Till now the data is not being received by ERLDC.

BSPTCL may update.

Deliberation in the meeting

BSPTCL informed that the issue will be taken up at the earliest and resolved.

Item No. B.16: Concerned members may update the latest status.

B.16.1. Status of construction of 400 kV Sterlite-Jharsuguda D/C sections

In 111th OCC, Powergrid informed that during the meeting they have given some formats which needs to be filled by SSL before finalization of targets.

SSL informed that they will submit the formats within 3-4 days.

In 113th OCC, Sterlite submitted the required formats with detailed information as desired.

PG-Odisha requested OCC to send a team for site visit and accordingly the target for Sterlite may be set up for completion of the job.

On enquiry, Sterlite informed that ROW problem still persists and forest clearances also yet to be received.

OCC took serious note and advised Sterlite to expedite the construction work.

In 114th OCC, Sterlite informed that 16 nos tower foundations have been completed and the forest clearance is expected by December, 2015.

OCC felt that the there is no considerable progress and advised Sterlite to expedite the work.

The issue has been referred to 31st TCC/ERPC meeting.

Powergrid/Sterlite may update.

Deliberation in the meeting

It was informed that in 31st TCC/ERPC meeting, Vedanta informed that out of 66 tower foundations, 21 have been completed and rest is expected to be completed by December, 2015. Commissioning of line is expected by 15 April, 2016.

TCC advised Vedanta to strictly adhere to the schedule.

B.16.2. Status of construction of Chuzachen bay at Rangpo S/s.

In 30th TCC meeting, Sikkim informed that MOU has been signed with Powergrid on 24th April, 2015 and the advance payment will be released by next week.

Powergrid informed that they will place the order after receipt of advance payment.

In 110th OCC, Sikkim informed that payment has been approved by Government of Sikkim and the advance payment will be made to Powergrid by 15th July, 2015.

In 111th OCC, Sikkim informed that the payment will be released by end of July, 2015.

In 113th OCC, Sikkim representative informed that PFC will release the payment by September 2015.

In 114th OCC, It was gathered from other sources that a meeting is scheduled for discussion on the same with PFC.

Sikkim may update.

Deliberation in the meeting

In 31st TCC/ERPC meeting, Powergrid informed that payment has been received from Sikkim and they will start the construction work at the earliest.

Powergrid informed that the DPR with tendering document will be ready within 2 months and after that DoP, Sikkim will do the tendering.

B.16.3. Non availability of important bays at FSTPP end

In 109th OCC, NTPC informed that 400kV FSTPP-KhSTPP-IV Tie bay will be charged by 1st week of June, 2015.

In 114th OCC, NTPC informed that the work will be done in November, 2015.

NTPC may update.

Deliberation in the meeting

NTPC informed that it will be done by next OCC.

B.16.4. Non-availability of Tie bay of 400kV Sagardighi-Behrampore-II

In 114th OCC, WBPDCL informed that the relay settings have been finalized and the tie bay is expected to be commissioned by 15th November 2015.

WBPDCL may update.

Deliberation in the meeting

WBPDCL informed that it will be in service within 2 weeks.

B.16.5. 220 kV inter-connecting lines of OPTCL with 400/220 kV Bolangir (PG), Keonjhar & Pandiabil S/s

PGCIL has already commissioned the 2x315MVA 400/220kV Bolangir S/s by LILOing of 400kV Meramandali-Jeypore S/C line and 400/220 kV Keonjhar S/s with an objective of supplying power from ER grid to its adjoining areas in Odisha.

In 114th OCC, OPTCL updated the completion schedule of inter-connecting system as follows:

Sl. No.	Name of the transmission line	Completion schedule
1.	**2x315MVA 400/220kV Bolangir S/s**	
a.	LILO of one circuit of Sadeipalli-Kesinga220 kV D/C line at Bolangir S/S	5 out of 14 completed. Dec, 2015 (Severe ROW problem)
b.	LILO of one circuit of Katapalli-Sadeipalli220 kV D/C line at Bolangir S/S	One tower left due to forest clearance. End of December, 2015
2.	**400/220 kV Keonjhar S/S**	
a.	Keonjhar (PG)-Keonjhar (OPTCL) 220 kV D/C line	Yet to be awarded
b.	Keonjhar (PG)-Turumunga (OPTCL) 220 kV D/C line	Yet to be awarded
3.	**400/220kV Pandiabil Grid S/s**	
a.	Pratapsasan(OPTCL)-Pandiabil (PG) 220 kV D/C line	It will take 1 year for completion.
b.	LILO of one circuit of Atri-Puri (Samangara) 220 kV D/C line at Pandiabil (PG)	***Work yet to be started.***

OPTCL may update.

Deliberation in the meeting

OPTCL updated the status as follows:

Sl. No.	*Name of the transmission line*	*Completion schedule*
1.	***2x315MVA 400/220kV Bolangir S/s***	
a.	*LILO of one circuit of Sadeipalli-Kesinga220 kV D/C line at Bolangir S/S*	*5 out of 14 completed. Dec, 2015 (Severe ROW problem)*
b.	*LILO of one circuit of Katapalli-Sadeipalli220 kV D/C line at Bolangir S/S*	*One tower left due to forest clearance. End of December, 2015*
2.	***400/220 kV Keonjhar S/S***	
a.	*Keonjhar (PG)-Keonjhar (OPTCL) 220 kV D/C line*	*Tender opening 18 Nov 2015*
b.	*Keonjhar (PG)-Turumunga (OPTCL) 220 kV D/C line*	*Yet to be awarded*
3.	***400/220kV Pandiabil Grid S/s***	
a.	*Pratapsasan(OPTCL)-Pandiabil (PG) 220 kV D/C line*	*It will take 1 year for completion.*
b.	*LILO of one circuit of Atri-Puri (Samangara) 220 kV D/C line at Pandiabil (PG)*	***May, 2016***

B.16.6. 220 kV inter-connecting lines of BSPTCL with 2x200 MVA, 400/132 kV sub-stations at Lakhisarai & Banka

In 30th TCC, BSPTCL informed that at present they are drawing power from 400/132 kV Lakhisarai S/s through LILO of 132 kV Lakhisarai (BSPTCL)-Jamui S/C at Lakhisarai(PG).

In 112th OCC, BSPTCL informed that LILO of 132 kV Lakhisarai (BSPTCL) - Jamui S/C at Lakhisarai(PG) was removed after the charging of 132 kV Lakhisarai (PG)-Lakhisarai (BSPTCL) D/C line which was earlier temporary arrangement for drawing power from 400/132 kV Lakhisarai (PG).

In 114th OCC, BSPTCL updated the latest status as follows:

Sl. No.	Name of the transmission line	Completion schedule
1.	**The 2x200 MVA, 400/132 kV Lakhisarai sub-station**	
a.	132 kV Lakhisarai (PG)-Lakhisarai (BSPTCL) D/C line	Charged
b.	132 kV Lakhisarai-Jamui (BSPTCL) D/C line	***Charged on 5th Oct, 2015***
2.	**2x200 MVA, 400/132 kV Banka sub-station**	
a.	LILO of 1st circuit of Banka (BSPTCL)-Sabour (BSPTCL) 132 kV D/C line at Banka (PG)	Charged.
b.	LILO of 2nd circuit of Banka (BSPTCL)-Sabour (BSPTCL) 132 kV D/C line at Banka (PG)	***Mid Nov, 2015***
c.	132 kV Banka (PG)-Sultanganj (BSPTCL) line-I	Completed
d.	132 kV Banka (PG)-Sultanganj (BSPTCL) line-II	Completed

BSPTCL may update.

Deliberation in the meeting

BSPTCL updated the status as follows:

Sl. No.	Name of the transmission line	Completion schedule
2.	***2x200 MVA, 400/132 kV Banka sub-station***	
b.	*LILO of 2nd circuit of Banka (BSPTCL)-Sabour (BSPTCL) 132 kV D/C line at Banka (PG)*	*Line completed and bays by December, 2015*

Item No. B.17: Third Party Protection Audit

1. Status of 1st Third Party Protection Audit:

The compliance status of 1st Third Party Protection Audit observations is as follows:

Name of Constituents	Total Observations	Complied	% of Compliance
Powergrid	54	37	68.52
NTPC	16	14	87.50
NHPC	1	1	100.00
DVC	40	26	65.00
WB	68	27	39.71
Odisha	59	38	64.41
JUSNL	34	16	47.06
BSPTCL	16	5	31.25
IPP (GMR, Sterlite and MPL)	5	5	100.00

The substation wise status of compliance are available at ERPC website (Observations include PLCC rectification/activation which needs a comprehensive plan).

Members may comply.

Deliberation in the meeting

Members noted for compliance.

2. Schedule for 2nd Third Party Protection Audit:

The latest status of 2nd Third Party Protection audit is as follows:

1)	Jeerat (PG)	Completed on 15th July 2015
2)	Subashgram (PG)	Completed on 16th July 2015
3)	Kolaghat TPS (WBPDCL)-	Completed on 7th August 2015
4)	Kharagpur (WBSETCL) 400/220kV -	Completed on 7th August 2015
5)	Bidhannagar (WBSETCL) 400 &220kV	Completed on 8th September, 2015
6)	Durgapur (PG) 400kV S/s	Completed on 10th September, 2015
7)	DSTPS(DVC) 400/220kV	Completed on 9th September, 2015
8)	Mejia (DVC) TPS 400/220kV	Completed on 11th September, 2015
9)	400/220/132kV Mendhasal (OPTCL)	Completed on 2nd November, 2015
10)	400/220kV Talcher STPS (NTPC)	Completed on 3rd November, 2015
11)	765/400kV Angul (PG)	Completed on 4th November, 2015
12)	400kV JITPL	Completed on 5th November, 2015
13)	400kV GMR	Completed on 5th November, 2015

The audit schedule is at Annexure-B17.

Members may decide the schedule for December, 2015.

Deliberation in the meeting

*Members decided the schedule for December, 2015 which is given at **Annexure- B.17**.*

Item No. B.18: Preparation of crisis management plan for Cyber Security in Power Sector in line with CERT-IN.

The activity of the preparation of Crisis Management Plan for countering the cyber attacks and its implementation including the Mock Drills, audits etc. is being monitored by CEA regularly in line with crisis management plant of Ministry of Power. Power Utilities (including generation, transmission & distribution utilities) of eastern region are to furnish regularly the updated status to on the same to Chief Engineer, Distribution Planning & Development Division, CEA.

NTPC communicated their activity of the preparation of Crisis Management Plan for countering the cyber attacks vide letter dated 2nd August, 2013.

In 113th OCC, Member Secretary informed that during interaction with consultants of Grid Study Committee, NLDC agreed that they will plan for conducting workshops on crisis management plan for Cyber Security and few workshops will also be held in Eastern Region.

CESC vide letter dated 22.08.15 had furnished their status of the preparation of Crisis Management Plan (CMP) for Cyber attacks in their system.

Members may note and comply.

Deliberation in the meeting

Members noted for compliance.

Item No. B.19: Certification through BIS as per IS 18001:2007 to all generating/ transmission units.

In 84th OCC meeting all constituents were requested to interact with BIS with intimation to ERPC and get certified as per CEA direction.

In 85th OCC NTPC informed that, NTPC-Farakka has been certified with IS 18001. Other constituents including OHPC requested to interact with BIS with intimation to ERPC and get certified as per CEA direction. The matter is getting reviewed by highest authorities with top priority.

In 88th OCC NTPC informed that, all NTPC stations in Eastern Region are certified with IS 18001. NHPC informed that, Teesta is also certified with IS 18001. After that, OHPC and CESC informed that their stations are certified with IS18001.

In 104th OCC, WBPDCL informed that Bandel TPS is certified with IS 18001.

OPTCL vide letter No. TB-SO-MISC-9/2010/1914 dated 20.12.2014 had proposed to go for IS 18001:2007 certification as per direction of CEA.

In 113th OCC, CESC informed that Budge-Budge Generating station (3x250 MW) has renewed their certification of BS 18001:2007.

Members may note and update the status.

Deliberation in the meeting

Members noted for compliance.

Item No. B.20: Energy Generation data management from Renewable Energy Sources

As per Electricity Act, 2003, CEA has been entrusted with the task of collecting electricity generation data. CEA is monitoring all the existing generating stations with capacity more than 25 MW (Conventional sources only). In recent years there has been appreciable growth in generation from Renewable Energy Sources (RES).

In view of above it was decided to monitor all the generating stations under RES connected to the grid and also to bring out month wise, state wise and sector wise report on RES generation in MU including peak generation from RES.

CEA already requested to nominate Nodal officers at the level of SLDC for the above purpose. However, only few states have responded.

Those SLDCs who have not yet nominated the nodal officers for Energy Generation Data management from RES are requested to furnish the details at following email/Fax:

Email: ceaopmwind@gmail.com with a copy to rishika.engineer@gmail.com and s.sewak@cea.nic.in
Nodal officers from CEA: Mrs. Rishika Sharan, Director, CEA, 011-26732663 and 26102263(Fax), Mobile: 9868021299, Mrs. Sarita Sewak, Dy. Director, 011-26732656

SLDCs may note and comply.

Deliberation in the meeting

Members noted for compliance.

Item No. B.21: Sub-committee on "Integration of Renewable Energy Sources".

In the first meeting of the committee for National Electricity Plan (NEP) held on 1st September, 2015, it was decided to constitute a sub-committee on integration of renewable energy sources with following terms of references:

a) Issues relating to integration of renewable energy into Power System
b) Balancing requirement for renewable energy

c) Flexible Generation

This sub-committee would be headed by Member (Power System), CEA.

In view of above all the constituents are requested to nominate a member, not below the level of Chief Engineer/Director. It is requested that information including address, email and mobile of the nominated member may be sent to CEA, PSP&PA-II Division within 15 days.

In 114th OCC, OCC agreed to nominate a member for the above sub-committee.

Subsequently nominations received from WBSETCL, OPTCL and CESC.

Other constituents may nominate the committee member.

Deliberation in the meeting

Members noted for compliance.

Item No. B.22: Data of Peak Demand

The peak demand met figure calculated by CEA is a part of the monthly Power Supply Postion Report prepared by CEA, based on the data provided by five Regional Power committee (RPCs), who in turn collect the data from State / UTs and RLDCs. As per the present methodology being adopted for calculation of States /Regional peak demand met, the figure of peak demand met at any time in the month is taken as peak demand met for the month. For all India monthly peak demand met, the sum of five regional peaks met, which may occur at different points of time is taken.

The above methodology has been reviewed and it has been decided with the approval of Chairperson, CEA that Peak demand Met and Peak Demand in the country should be based on hourly all India demand data. The matter was taken up with POSOCO for getting the hourly data of peak demand met for each month in respect of all the regions in the country in the first week of following month and they have assured to furnish the same. To calculate the demand, data of hourly scheduled and unscheduled power-cuts / load shedding is also required, which is not available with POSOCO.

It is, therefore, requested that hourly figures of scheduled/ unscheduled power cuts/load shedding data may be collected from States / UTs and the same may be sent to CEA every month as per above schedule in the enclosed format, in spread sheet, so that hourly figures of peak demand can be calculated and incorporated in Power Supply Position report.

This data for a month may kindly be sent in the first week of each month, along with PSP data, starting from the data for the month of February, 2015. The format for sending the data of hourly scheduled and unscheduled power-cuts / load shedding has already been circulated.

In 110th OCC meeting, OCC advised all the concerned utilities (BSPTCL, JUSNL, OPTCL, WBSETCL & Sikkim) to send the data of hourly scheduled and unscheduled power-cuts / load shedding by mail to mserpc-power@nic.in latest by first week of each month.

Bihar and OPTCL have submitted the data for the month of October, 2015.

Members may submit the data.

Deliberation in the meeting

DVC informed that data will be submitted today.
JUSNL informed that data will be submitted within a week.

Item No. B.23: Pollution mapping for Eastern Region

The Pollution Mapping work in ER was started with on-site measurement of ESDD and NSDD. The latest available status is as follows:

Utility	Scope	Installed Locations	Number of locations where 1st set of Measurements Completed
JUSNL	67	27	**6**
BSPTCL	59	52	**10**
WBSETCL	73	70	**43**
OPTCL	164	102	**102**
Sikkim	12	9	**6**
Powergrid ER 1	99	99	**99**
Powergrid ER 2	40	40	**40**
Powergrid Odisha	43	43	**43**

In 112th OCC, WBSETCL informed some measurement kits are not working properly. The Nodal Officer of WBSETCL has been changed and the same will be communicated.

OCC advised WBSETCL to communicate the issue to Powergrid.

OCC advised all constituents to complete the 1st set of measurements and send to Powergrid/CPRI.

Powergrid vide mail dated 5th November, 2015 requested to complete the 2nd set of measurements by end of Novemebr, 2015, as it is already passed 4 months after completion of 1st set of measurements for the most of the locations.

Powergrid also requested to provide probable pollution sources and direction details near the site with specific details e.g. type of pollution sources(factories, Brick Kiln, Agricultural pollutant, Saline pollutant from sea coast), direction form site, distance from site etc.

Members may update.

Deliberation in the meeting

Members updated the status and noted for compliance.

Powergrid informed that 2 kits of WBSETCL are defective; the same will be sent to CPRI for replacement as kits are under AMC.

Item No. B.24: Network & Chuzachen SPS review proposal in view of reduced NOC – Chuzachen

Chuzachen vide mail dated 1st October, 2015 informed that they had received the revised NOC which is to be implemented with effect from 30/09/2015 and they accept the reduction in NOC in line with the OA regulations.

Chuzachen informed that they understand the obligations to accommodate new generators in the already congested network lacking in proper evacuation and curtailment accorded to STOA customers compared to LTOA generators.

In 114th OCC, Chuzachen explained revised SPS scheme with a detailed presentation.

OCC felt that the Pproposal-1 will not work as during the peak time 132 kV Chuzachen-Melli loading is crossing 70 MW. Also in the scenario of bus split operation at Chuzachen in case of tripping of 132 kV Melli- Siliguri, the Chuzachen will form an island with Melli load which may not survive.

Proposal-2 may also not work as in case of (n-1) contingency the line loading will cross 70 MW.

Therefore, OCC felt that the Proposal-3 for bus split operation at Rangpo may be analyzed.

ERLDC informed that the proposal of bus split operation of 132 kV Rangpo bus is actually a CTU proposal which was forwarded by CTU for study and review. ERLDC presented the scheme with the load flow study.

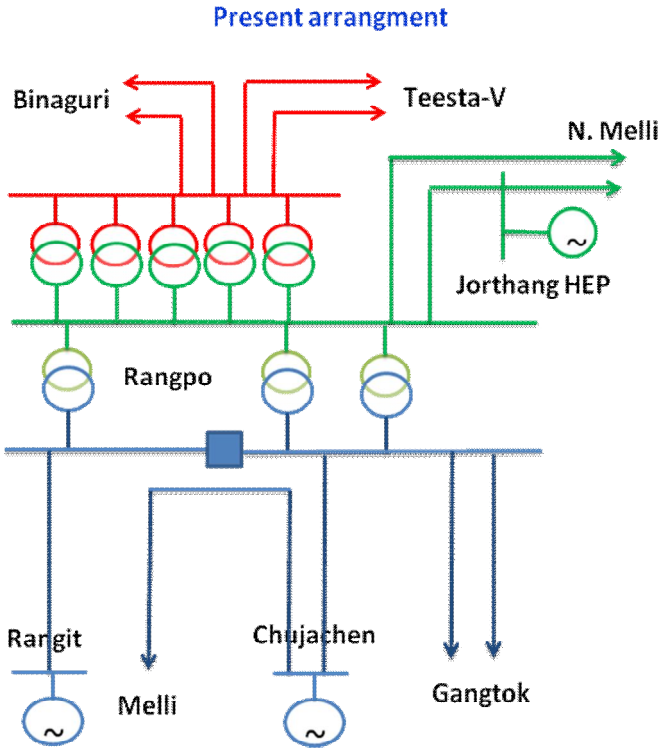

Figure-1

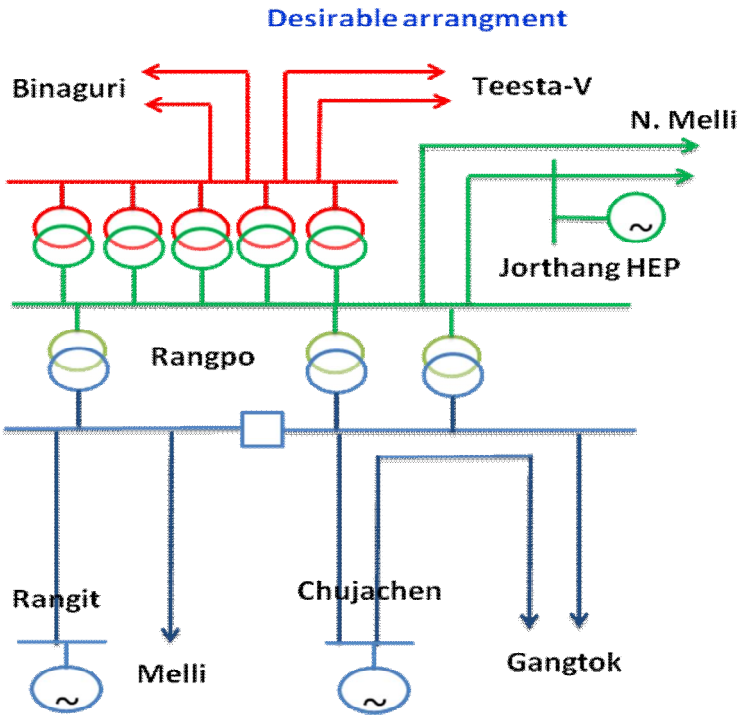

Figure-2

ERLDC explained that at present one 132 kV ckt of Chuzachen is directly connected to Melli without terminating to 132 kV Rangpo. The all other 132 kV feeders i.e. one ckt from Rangit, one ckt from Chuzachen and two ckts from Gangtok are terminating at 132 kV feeders. The same is shown in **figure-1**.

Now for bus split operation the 132 kV Melli ckt will be terminated at Rangpo and will be with 132 kV Rangit feeder in one section of 132 kV Rangpo bus. The 132 kV Chuzachen feeder will be directly connected to one ckt of 132 kV Gangtok feeder. And the second ckt of 132 kV Gangtok along with other ckt of 132 kV Chuzachen will be on another section of 132 kV Rangpo bus. The Bus sectionalizer will be kept in open condition for split bus operation. The scheme configuration is shown in **figure-2.**

Further, ERLDC informed that as per the study results the bus split operation of 132 kV Rangpo will allow the full evacuation of Chuzachen and Jorthang units without any cap for both peak and off-peak scenarios.

After detailed deliberation, OCC agreed to the proposal of bus split operation of 132 kV Rangpo and advised Powergrid to take up the issue with CTU for implementation of the scheme at the earliest.

ERLDC/CTU may update.

Deliberation in the meeting

Powergrid informed that for implementation of the above scheme site visits from its corporate engineering division is required.

OCC requested Powergrid to expedite it so that the eastern grid could avoid loss of crucial hydro generation from Chuzachen and Jorthang HEP by early implementation of bus split operation as accepted by OCC.

Item No. B.25: Antitheft charging of lines from Meramundali end --ERLDC

In the last OCC meeting it was discussed that format B5 was required to be furnished when antitheft charging of a part of the line was done from one end and for tapping of 66kV class and above lines Sub-regulation(6) of regulation 44 were to be strictly complied with for which the matter was to be taken up with the Chief Electrical inspector, CEA. However, ERLDC has not yet received any format or permissions from the appropriate authorities in this regard.

ERLDC/OPTCL may update.

Deliberation in the meeting

OPTCL informed that they have not yet charged the line for antitheft purpose and assured that necessary formats B2 and B5 will be submitted before antitheft charging.

Item No. B.26: Dynamic data of Generator Models required in PSSE for Simulations -- ERLDC

To carry out proper simulation studies in PSSE, actual generator parameters are required as incomplete or incorrect modelling of generator may not give valid simulation result. Hence all the generating companies are requested to furnish data for generator, exciter, governor, PSS of their all generating units in the format.

In 114th OCC, the house was informed that the formats are available at ERPC website. (www.erpc.gov.in)

OCC advised all the generating utilities to submit the relevant information as per the format.

All generating utilities agreed to submit.

ERLDC may update.

Deliberation in the meeting

It was informed that data received only from FSTPS, NTPC.

OCC advised all other constituents to submit the data latest by 15th December, 2015.

Item No. B.27: Auto-Reclose (A/R) scheme of 400kV Jeypore- Gajuwaka D/C line

In the past many incidents of overvoltage tripping of 400kV lines emanating from Jeypore S/Stn had occurred. On further examination, it was observed that most of these over voltages were associated with SLG faults in 400kV Jeypore-Gajuwaka line.

In the 33rd PCC meeting held on 21-07-15, it was clarified by PGCIL that for 400kV Jeypore-Gajuwaka line, 3-ph tripping and auto-reclosing scheme has been implemented at Gajuwaka end, whereas, at Jeypore 1-ph tripping and auto-reclosing would occur for any SLG fault (in Z-I). PGCIL further explained that 3-phase tripping scheme had been adopted at Gajuwaka end on advice of OEM of HVDC, for avoiding commutation failure of the converter on AC side voltage unbalance & 3rd harmonics, which might occur if 1-ph tripping scheme had been implemented.

In this connection, it is stated that 3-ph tripping at Gajuwaka end and 1-ph tripping at Jeypore end is likely to trigger high voltage condition at Jeypore, as the two healthy phases of the 220km long line remain idle-charged during the dead time. PGCIL may therefore consider implementing 3-ph tripping at Jeypore end also.

It is further requested to take necessary action to ensure that voltage input for the PMU at Jeypore is obtained directly from the 400kV bus PT, instead of the arrangement existing at present. This is essential so that the PMU records the true bus voltage of Jeypore for all possible trippings.

112th OCC advised Powergrid to consider implementation of 3-ph tripping and auto-reclosing scheme at Jeypore end.

Powergrid informed that voltage input to the PMU at 400kV Jeypore S/s has been connected from 400kV bus PT.

In 114th OCC, Powergrid informed that they referred the issue to their corporate office and reply is awaited.

Powergrid may update.

Deliberation in the meeting

Powergrid informed that they will submit their reply by next week.

Item No. B.28: Mock Black start exercises in Eastern Region – ERLDC

i) The status of black start exercises

The schedule of the proposed black-start exercises for F.Y 2015-16 is as follows:

Sl no	Name of Hydro Station	Schedule	Tentative Date	Schedule	Tentative Date
		Test-I			
1	U.Kolab	Last week of May, 2015	*Done on 16/07/15*	Last Week of January 2016	
2	Maithon	1st week of June 2015	***After Oct, 2015***	1st Week of October 2015	
3	Rengali	2nd week of June 2015	***Done on 13/10/15***	Last week of November 2015	
4	U. Indravati	3rd week of June 2015	*Done on 16/07/15*	2nd week of February 2016	
5	Subarnarekha	2nd week of October 2015		1st week of January 2016	

6	Balimela	1st week of November 2015		1st week of March 2016	
7	Teesta-V	2nd week of November 2015	***2nd week of Dec, 15***	Last week of February 2016	
8	Chuzachen	1st week of May, 2015	***2nd week of Dec, 15***	2nd week of January, 2016	
9	Sikidri	Done on 9th June, 2015			
10	Burla		***Jan, 2016***		

Members may update.

Deliberation in the meeting

Members noted.

ii) Testing of DG sets meant for Black start

Test run report of DG sets for blackstart has been received only from Odisha hydro units. The test run reports of other machines may be sent to erldc.cal@gmail.com and erldcoutage@gmail.com.

Constituents may kindly ensure compliance.

Deliberation in the meeting

Members noted.

Item No. B.29: Restoration of SCADA data

Updated latest status is circulated in the meeting. During deliberations in 99th OCC it was pointed out by most of the constituents that SCADA problem in many locations are due to behind the schedule progress of work on the part of CTU/PGCIL. OCC advised Powergrid/CTU to expedite and restore at least the priority RTUs by 31st July, 2014.

Updated status is enclosed at Annexure-B.29.

CTU/ERLDC may update.

Deliberation in the meeting

*Updated status is enclosed at **Annexure-B.29**.*

Item No. B.30: Restricted Governor Mode of Operation

The latest status of units of ER under RGMO is available at ERPC website (http://www.erpc.gov.in/) under Operation>Important data.

In 108th OCC, ERLDC informed that the RGMO/FGMO response of the generators needs monitoring on continuous basis.

OCC advised ERLDC to intimate the event of sudden drop in frequency to the generators and requested all generators to provide the RGMO/FGMO response data to ERLDC during the said incidents.

ERLDC informed that on 12.10.2015 there was sudden load loss of 900 MW in NR and they observed 0.11 Hz change in the grid frequency.

As per the data of ERLDC they have received the RGMO/FGMO response only from Burla, Kahalgaon, Teesta-V and SSL generators. The response of other generators are not satisfactory.

OCC advised all the generators to send the FRC response for the event.

ERLDC may update.

Deliberation in the meeting

ERLDC informed that for effective monitoring of unit wise governor response, ERLDC proposes to create a web-group wherein SCADA data recorded by ERLDC following an event of sudden load-generation imbalance would be posted within 2-3 days of occurrence of the event. The login id and password to access the web-group would be duly intimated by ERLDC to all concerned.

Coordinators from all the concerned generating stations would post the unit wise MW response as recorded at their respective ends, for a period +/- half-an-hour of the instant, within two days of posting by ERLDC. For the purpose of analysis, wherever significant variation would be observed w.r.t. to SCADA data, generator`s data would be adopted for detailed analysis.

In this connection, SLDCs of E. Region are requested to extend cooperation by coordinating with nodal officers of generators under their respective jurisdiction, in data collection and posting in webgroup.

OCC requested all the constituents to provide their respective e-mails which can be added to the web group.

E-mails can be provided by all SLDCs, Hydro generators of having capacity 10 MW & above and Thermal generators of having capacity 200 MW & above.

SLDCs will co-ordinate with their IPPs of 10 MW & above Hydro generation and 200 MW & above Thermal generation.

Item No. B.31: Reactive Power performance of Generators and GT tap position optimization

ERLDC may present the reactive power performance of Generators.

Deliberation in the meeting

ERLDC presented the reactive performance and placed the performance data as given below:

Maximum and minimum voltage was observed (data taken from SCADA)
Generating stations have been monitored for sample dates in the month of October 15:

Power Plant	Max and Min Voltage observed for Oct 2015 (KV)	Date for monitoring (October 2015)
Farakka STPS	425,405	15,12
Khalgaon STPS	421,408	15,12
Talcher STPS	410,399	23
Teesta	409,400	24
Bakreshwar TPS	409,382	16
Kolaghat TPS	421,390	15
Sagardighi TPS	Data not available	---
MPL	423,409	17

Mejia-B	425,415	15
DSTPS	427,415	13
Adhunik TPS	425,405	21
Sterlite	429,419	15

Further, ERLDC informed that due to non-availability of data from Sagardighi, GMR, SSL and HEL their performance could not be analyzed.

OCC advised above generators to provide their DCS data of the particular days to ERLDC for study of reactive performance.

Members agreed.

a) Schedule for reactive capability tests

In 113th OCC, members updated the status as follows:

a. Adhunik TPS(both units) –Yet to be confirmed by Adhunik
b. DSTPS(Unit#2 only pending) –Not yet done
c. Mejia#8 (only U#8 pending) – Not yet done
d. Koderma TPS(both units) – Not yet done
e. JITPL(both units) –Procedure given. Not yet done
f. Barh Unit#4 –After PG test

Members may update.

Deliberation in the meeting

Members noted.

b) Optimization of GT tap position at Adhunik, Mejia-B and DSTPS

In 97th OCC, members requested ERPC Secretariat to convene a special meeting for detail deliberation on tap changing proposal before next OCC.

Accordingly, a special meeting was convened on 27th June, 2014. During the meeting following tap position was agreed:

Sl. No.	Utility	Present GT tap position	Agreed tap position in the meeting
1	APNRL: GT-1	8	9
	APNRL: GT-2	3	4
2	Mejia-B, DVC	4	5
3	DSTPS, DVC	5	6
4	MPL	5	6

DVC, APNRL and MPL have changed the GT tap as per the recommended GT tap position.

ERLDC may update the status.

Deliberation in the meeting

Members noted.

PART C:: OPERATIONAL PLANNING

Item no. C.1: Shutdown proposal of transmission lines and generating units for the month of December' 15

Members may finalize the Shutdown proposals of the generating stations for the month of December' 15 as at **Annexure-C.1**.

ERLDC may place the shutdown proposals of transmission lines.

Members may confirm.

Deliberation in the meeting

Approved maintenance programme of generators and transmission elements for the month of Dec, 2015 is given at **Annexure-C.1**.

ERLDC informed that constituents are not submitting the shutdown proposal by 5th of the month as decided and this makes difficult for them for compiling, studying and preparing final list of shutdown.

OCC advised all the constituents to strictly adhere to the time schedule for submission of the list of shutdown to ERLDC.

A. Shutdown of 400KV Farakka-Malda Ckt-II for replacement of line side equipments both at Farakka & Malda --Powergrid

For up-gradation of 400KV Farakka-Malda D/C line, replacement of bay equipments at Farakka and Malda from 2000A rating to 3150A rating are in progress. For replacing the line side equipments at both Farakka and Malda shutdown of line is required.

It is planned to replace the line side equipments of 400KV Farakka-Malda Ckt-II first, accordingly shutdown of 400KV Farakka-Malda Ckt-II is required from 23.09.2015 to 09.10.2015.

113th OCC deferred the issue for next meeting of OCC.

In 114th OCC, Powergrid informed that they need shutdown of 400KV Farakka-Malda Ckt-II for three months for HTLS conductor replacement.

After detailed discussion, OCC allowed the shutdown of 400KV Farakka-Malda Ckt-II for one month w.e.f. 25th October 2015 for HTLS conductor replacement.

It was also decided that the progress of the work will be reviewed in next OCC and accordingly the shutdown will be reviewed as per the prevailing grid condition.

Powergrid agreed.

Powergrid may update and members may discuss.

Deliberation in the meeting

Powergrid informed that they have taken the shutdown from 03.11.2015 and work has been started and now it is in full swing. Therefore, they need shutdown for another 2-3 months to complete the job.

ERLDC informed that the HVDC link of B.Chariyali - Agra in reverse mode is not stable and this line is an important link for power transfer to N. Bengal and NER in lean hydro season.

OCC advised ERLDC to carry out system study for shut down of 400 kV Farakka-Malda with all the options available. However, OCC felt that shutdown of one ckt of 400 kV Farakka-Malda could not be allowed during lean hydro period.

B. Shutdown of 400KV Rourkela-Raigarh Ckt #3 & 4 for Railway crossing --Powergrid

Powergrid vide letter dated 16.10.2015 informed that diversion of Rourkela- Raigarh ckt # 3 & 4 is proposed for Railway crossing at location no 364-365, for which shut down has been requested in the month of December, 2015.

Powergrid will try to keep one circuit on ERS and other circuit will be on continuous shutdown. As this diversion is in the interest of Ministry of Railways, Powergrid has requested that OCC may please consider this outage as "Deemed Availability".

Powergrid may update and members may discuss.

Deliberation in the meeting

OCC felt that the deemed availability is commercial issue and referred the issue to Commercial Committee.

Item no. C.2: Anticipated power supply position during December'15

The abstract of peak demand (MW) vis-à-vis availability and energy requirement vis-à-vis availability (MU) for the month of December'15 were prepared by ERPC Secretariat on the basis of Provisional LGBR for 2015-16 and feedback of constituents, keeping in view that the units are available for generation and expected load growth etc. is at **Annexure-C.2**.

Members may confirm.

Deliberation in the meeting

Modified anticipated power supply position for the month of December, 2015 after incorporating constituents' observations is given at **Annexure-C.2.**

Item no. C.3: Prolonged outage of power system elements in Eastern Region

(i) Generating units:

Generating Station	UNIT NO	CAP(MW)	REASONS FOR OUTAGE	DATE	Date of restoration
STERLITE	1	600	PLANNED SHUTDOWN	17-Sep-15	
FARAKKA	6	500	TUBE LEAKGE	6-Nov-15	
ADHUNIK	2	270	ELECTRICAL FAULT	7-Nov-15	
GMR	2	350	BOTTOM ASH PROBLEM	8-Nov-15	
STERLITE	4	600	DESYN .DUE TO LOW	7-Nov-15	
MEJIA	1	210	STATOR EARTH FAULT	16-Sep-15	
DSTPS	2	500	COAL SHORTAGE	16-Sep-15	
KODERMA	1	500	ASH POND PROBLEM	11-Nov-14	
WARIA	4	210	TUBE LEAKAGE	7-Nov-15	
CHANDRAPURA	7	250	ROTOR EARTH FAULT	6-Nov-15	
DPL	8	250	TO PRESERVE COAL	21-Aug-15	
KOLAGHAT	2	210	FOR MAINTAINANCE JOB	31-Oct-15	
KOLAGHAT	1	210	TUBE LEAKAGE	3-Sep-15	
KOLAGHAT	6	210	FIRE HAZARD IN HP	6-Nov-15	
BAKRESWAR	1	210	TUBE LEAKAGE	28-Oct-15	
SAGARDIGHI	2	300	TUBE LEAKAGE	7-Oct-15	

MUZAFFARPUR	2	110	BOILER PROBLEM	19-Oct-15	
MUZAFFARPUR	1	110	PROBLEM IN TURBINE	12-Sep-15	
BOKARO B	1	210	DUE TO LOW DEMAND	21-Oct-15	
BOKARO B	2	210	TUBE LEAKGE	2-Nov-15	
MEJIA B	7	500	OVERHAULING	24-Oct-15	
MEJIA	3	210	GT DISSOLVED GAS	31-Oct-15	

(ii) Transmission elements

Name of the Line/Element	Outage	Reason	Date of restoration
400Kv FSTPP-MALDA II	03.11.15	UNDER S/D FOR	400Kv FSTPP-

Members may update.

Deliberation in the meeting

Members noted.

Item no. C.4: Information regarding commissioning of new transmission element

1. 132kV Lakhisarai(PG)-Jamui(BSPHCL)-I and II were charged for the first time at 16:02hrs and 16:29hrs of 05/10/15 respectively.
2. 400kV Bus sectionalizing breaker-II (between Bus-II and Bus-IV) at Durgapur was charged for the first time at 18:52hrs of 12/10/15.
3. 400kv Meramundali-New Duburi-I was charged for the first time at 20:20hrs of 19/10/15.
4. 400kV Jamshedpur-Rourkela-II(Looping upto dead end tower of Chaibasa) was charged for the first time at 19:46hrs of 31/10/15.

Members may update.

Deliberation in the meeting

Members noted.

Item no. C.5: Status of commissioning of generating station and transmission elements

New generating units:

S.No.	Power Plant	Plant Size	Expected date
1	Raghunathpur Unit#1	2x600MW	
2	Sagardighi Unit #3	500 MW	

New transmission elements:

Sl No.	Name of Element	Expected date
1	400kV Rajarhat-Purnea D/C(with LILO of one circuit each at Farakka and Gokarno)	
2	Augmentation of 400kV Farakka-Malda D/C with HTLS conductor	
3	400kV Ind-Bharath-Jharsuguda D/C	
4	400kV Talcher-Bramhapur-Gazuwaka D/C	
5	400kv Talcher-Rourkella(2nd D/C-Quad)	
6	400kV Sterlite-Jharsuguda D/C	
7	LILO of Baripada-Mendhasal D/C at New Duburi	
8	765kv Anugul-Srikakulum D/C	
9	400kV Sasaram-Daltonganj D/C &Daltonganj S/Stn	
10	400 kV Ranchi-Raghunathpur D/C	
11	400 kV Meramandali-Dubri D/C	
12	400 kV IB-Meramandali D/C	

13	220 kV TLDP-IV – NJP ckt-2	
14	220 kV Bidhansai-Cuttack D/C	
15	220 kV Girdih-Koderma D/C	

Members may update.

Deliberation in the meeting

Members noted.

PART D:: OTHER ISSUES

Item no. D.1: UFR operation during the month of October'15

System frequency touched maximum 50.33 Hz at 18:02Hrs on 01/10/2015 and minimum of 49.62Hz on 17/10/15 at 18:22Hrs. Accordingly, no report of operation of UFR has been received from any of the constituents.

Members may note.

Deliberation in the meeting

Members noted.

Item no. D.2: Non-compliance of directions issued by SLDC

Vide clause no 5.5.1.(c)(h) of IEGC, non-compliance of SLDC directions by SEB/Distribution licenses/bulk consumers to curtail overdrawal are to be reported to ERLDC for incorporating the same in weekly report to be prepared and published by ERLDC.

All SLDCs are to inform ERLDC the instances of non–compliance of SLDC directions by SEB/Distribution licenses/bulk consumers to curtail overdrawal, within two days after the day of operation.

No report from any constituent has yet received. Hence, ERLDC would be considering 'Nil' report for all constituents for October'15.

Members may note.

Deliberation in the meeting

Members noted.

Item no. D.3: Grid incidences during the month of October, 2015

Sl no	Disturbance Place	Date & Time	Generation loss (MW)	Load loss (MW)	Remark	Category
1	JSEB (Chandil)	01/10/15, at 10:50Hrs	0	180	Total power failure at downstream of the 220kV Chandil S/s due to tripping of all 220/132kV, 100MVAx4 ATRs on operation of overcurrent protection & master trip relay from LV side	-
2	JSEB (Chandil)	02/10/15, at 12:42Hrs	0	190	Total power failure at downstream of the 220kV Chandil S/s due to bursting of B-Ph jumper of wave trap of 132kV Chandil-Rajkharsawn S/C line at Chandil end. All four 220/132kV, 100MVA ATRs tripped.	-

3	Biharshariff (BSPTCL)	08/10/15, at 08:30hrs	0	350	Total power failure occurred at 220kV Biharsariff S/s due to tripping of 220kV Biharshariff-Begusarai-I on B-Ø to ground fault.	GD-1
4	BSPTCL (Madhepura)	10/10/15, at 17:48hrs	0	400	Total power failure occurred at 220kV Madhepura S/s and adjacent 132kV s/s due to tripping of 220kV Purnea-madhepura-D/C line. Part of Nepal load also got interrupted due to this incident.	GD-1
5	Rangpo, Teesta-V and Jorethang HEP	17/10/15 at 10:45hrs	416	0	Multiple tripping occurred at Rangpo S/s due to which all running units of Teesta HEP and Jorethang HEP tripped due to loss of evacuation path.	GD-1
6	JSEB (Ramchandrapur)	20/10/15, at 05:36Hrs	0	180	Total power failure occurred at Ramchandrapur S/s due to bursting of R-Ph CT of 220kV Ramchandrapur- Chandil S/c line at Ramchandrapur end.	GD-1
7	JSEB (Chandil)	21/10/15, at 00:15Hrs	0	320	Total power failure at 220kV Chandil S/s due of bursting of R-Ph CT of 220/132kV ATR-I at Chandil at LV side.	GD-1
8	Rangpo, Teesta-V and Jorethang HEP	23/10/15 at 14:41hrs.	389	0	Multiple tripping occurred at Rangpo S/s due to which all running units of Teesta HEP and Jorethang HEP tripped due to loss of evacuation path.	GD-1
9	WBSETCL (220kV Kasba S/s)	29/10/15 at 01:07hrs	0	150	Total power failure occurred at due to fault occurred in wave trap of 220kV Jeerat-Kasba-II line at Kasba end.	GD-1

Members may note.

Deliberation in the meeting

Members noted.

Item no. D.4: Any other items.

1. ratification of POC data for Q4(Jan16-Mar16)

In the 3rd Validation Committee meeting for PoC application period Oct'15-Dec'15, held on 30th September 2015, at NLDC conference Hall, CERC had proposed a methodology for ratification of projected data at RPC form. Minutes of the meeting is attached for reference.

In line with the decision in the Validation Committee meeting, Demand and Generation projections w.r.t Eastern Region constituents is attached for ratification at RPC form.

Data has been received from DVC, Orissa, NTPC and NHPC.

Deliberation in the meeting

*OCC requested all the constituents to go through their respective Demand and Generation projections (given at **Annexure- D.4**) and communicate their comments to ERLDC/NLDC, if any.*

Members agreed.

Meeting ended with vote of thanks to the chair.

****

Annexure- I

Participants in the 115th OCC meeting of ERPC

Venue: ERPC Conference Hall, Kolkata Time: 11:00 hrs Date: 20.11.2015 (Friday)

Sl No	Name	Designation/ Organization	Contact Number	Email	Signature
1	A. K. Bandyopadhyay	MS ERPC	9433068533	mserpc-power@nic.in	[signature]
2	U.K. Verma	GM, ERLDC	08902496220	ujwalkumar.verma@gmail.com	[signature]
3	P.P. BANDYOPADHYAY	DGM(SO), ERLDC	7011083323	parth_bandy@yahoo.co.in	[signature]
4	G. Chakraborty	DGM(MO), ERLDC	9433041815	c.goutam62@gmail.com	[signature]
5	P.S. Das	Asst GM(SO), ERLDC	9433041837	psdas_psd@yahoo.com	[signature]
6	S. BANERJEE	Asstt GM, ERLDC	9433041823	surajitb@gmail.com	[signature]
7	S.K. Singh	DGM (Am)	8544401030	[illegible]@gmail.com	[signature]
8	Jiten Das	Asst GM (Am)	9434739354	erts2am@gmail.com	[signature]
9	B. Pan	CE/SLDC DVC	9903247102	bpan.dvc@gmail.com	[signature]
10	S Nayak	AGM/ER-2 NTPC	9437041581	snayak@ntpc.co.in	[signature]
11	ANIL KUMAR	DGM (ER-1) NTPC Patna	9431215301	anilkumar@ntpc.co.in	[signature]
12	J Pani	AM(E) NHPC/Teesta	7800003595	jaganathnhpc@gmail.com	[signature]
13	K.S. Chetty	S.E(EHV) E&P Power Sikkim	9933086804	khartasingh.chetty@yahoo.co.in	[signature]
14	P.K. Senapati	GMR/AGM(Elect)	9777580352	Prasant.Senapathy@gmrgroup.in	[signature]
15	C.S. Bobade	JITPL/VP	8130613563	transmission@jindalgroup.com	[signature]
16	Arjun Singh	JITPL/GM	9899071717	site_liaison@jindalgroup.com	[signature]
17	Saurav K Sahay	Sr Engineer/ERLDC	9432013173	Sahay.saurav@gmail.com	[signature]
18	Bramhanand Verma	Engr/ERLDC	9403180731	bramhanand18@gmail.com	[signature]
19	Raj P. Kundu	Engr/ERLDC	9903329591	rajpratim@gmail.com	[signature]
20	Nirbu Dendup	DEE/BLPC/CHP	17616349	n.dendup49@gmail.com	[signature]

Participants in the 115th OCC meeting of ERPC

Venue: ERPC Conference Hall, Kolkata Time: 11:00 hrs Date: 20.11.2015 (Friday)

Sl No	Name	Designation/ Organization	Contact Number	Email	Signature
21	Tenzin Wangda	SO/ KHP DGPCL	17597374	tenzinwangdakhp@gmail.com	
22	Tekanth Adhikari	AE THP-DGPC	17416548	tekanth88@gmail.com	
23	Langa Tshering	Engineer, DGPC	00975 17297863	langatshering@gmail.com	
24	N.G. Sahu.	SM (PS)	8334703700	ngsahu@wbpdcl.co.in	
25	Ch Mohan Rao	Dy. Manager PGCIL-odisha	9437962193	cmmadicha@gmail.com	
26	T. R. Mohapatra	Dy. Mgr, POSOCO ERLDC	9433041873	tushar.mohapatra@gmail.com	
27	B. Mondal	Engr, ERLDC	9903329231	biswajit.mondal@gmail.com	
28	V. Kalyanam	SE, ENI	24203016	erpc-cea@nic.in	
29	D.K. Bauri	EE, ERPC	9883617236	eeop.erpc@gov.in	
30	S. KESRINAL	IEE, ERPC	9831919509	aecom2.erpc@gov.in	
31	D. K. Singh	ESE(SLDC)IC	7763817716	slbc.bseb@gmail.com	
32	Rajendra Pd.	A.E. TVNL	9470383344	rp.tths@gmail.com	
33	Sudip Singha	SEE, CRITL, JUSNL	9386129386	SudipSingha83@gmail.com	
34	Shailesh Prakash	EEE, SLDC, Ranchi	9470145220	sldcranchi@gmail.com	
35	A. Raichaudhuri	CE/SLDC/WBSETCL	9433910030		
36	A. Ghosh	EE (CPD) WBSETCL	9434910019	cpd@wbsetcl.in arundhati.ghosh@wbsetcl.in	
37	T. K. DE	CE/PTAP WBSEDCL	9433870748	kumartapande@gmail.com	
38	U. K. Pal	Sr. Manager (Opn) DPL	9434735982	ukpaldpl@gmail.com	
39	M. R. Mohanty	GM (Opn) SLDC OPTCL	09438907310	mrmohanty112@gmail.com	
40	PRASHANT KUMAR DAS	DGM, SLDC, OPTCL	9438907408	prashantk.das@yahoo.co.in	

Participants in the 115th OCC meeting of ERPC

Venue: ERPC Conference Hall, Kolkata Time: 11:00 hrs Date: 20.11.2015 (Friday)

Sl No	Name	Designation/ Organization	Contact Number	Email	Signature
41	Madhusudan Sahoo	AGM (elect), GRIDCO	9692427876	gridco.ebc@gmail.com, sgmpp@gridco.co.in	M.S.Sahoo
42	H.P. Mahapatra	Mgr, OHPC	9861164943	hpm.ohpc@gmail.com	[illegible]
43	A. Sen Gupta	DGM, CESC	9831802682	arunava.gupta@rp-sg.in	[illegible]
44	Devendra Yadav	Chuzachen	8170012387	devendranitjos@gmail.com	[illegible]
45	S. Chowdhury	Asso Mgr, VL	9937294326	[illegible]	[illegible]
46	S.K. Saha	SSE, Eastern Railway.	9002025315	sanjay.saha39@gmail.com	[illegible]
47	RAJDEEP BHATTACHARJEE	RE, BSPHCL	9830380689	rekolbsphcl@gmail.com	[illegible]
48	C.K Haldar	ACE, WBSLDC	9432209503	ckhaldar@yahoo.co.in	[illegible]
49	P.K. Kundu	ACE, SLDC, WBSETCL	9434910263	pkundu_1961@yahoo.co.in	[illegible]
50	P. Banerjee	G. Manager, WBSEDCL MTPS	8356913891	pk.banerjee@wbpdcl.co.in	[illegible]
51	D Dasgupta	Sr Mgr, DPL	9434709175	ctmc.dpps@gmail.com	[illegible]
52	Preetam Banerjee	SE/WBSEDCL	9432140765	preetam72@gmail.com	[illegible]
53	Aniruddha Sethy	Dy Manager GRIDCO	9438506354	ele.asethi@gridco.co.in	[illegible]
54	N. Khan	LO, Grid Co	9433035435	Khannundhi44@gmail.com	[illegible]
55	P.K. DE	EE, ERPC	9433125844	rpc.erpc@gov.in	[illegible]
56	Levin.R	AEE, ERPC	8335905973	levinnitc@gmail.com	[illegible]
57					
58					
59					
60					

Annexure- B.5

UFR installed in different GSS of BSPTCL ,Patna as listed below is in service upto 14th November 2015.

SL. No.	NAME OF GRID	CONNECTED 33 KV FEEDER	LOAD IN MW	SETTING
1.	132/33 KV Gaighat grid	Saidpur	20	48.6
		City Feeder	22	48.6
2.	132/33 KV Mithapur grid	PESU V	18	48.8
		PESU II & IV	32	48.8
3.	220/132/33 KV Fatuha grid	Katra	14	48.8
		Meena Bazar	24	48.8
		Fatuha	22	49.0
		Dina Iron	12	49.0
4.	132/33 KV Digha grid	Digha - I	18	48.6
		Digha - II	7	48.6
		Patliputra	20	49.0
		Excise colony	20	49.2
5.	132/33 KV Bari Pahari (Bihar Sharif)	Bari Pahari I	11	49.2
		Bari Pahari II	5.5	49.2
		Sohsarai	10	49.2
		Ramchandrapur	15	48.6
		Noorsarai	10	49.2
		Asthama	5	49.2
6.	132/33 KV Harnaut	Line II Feeder (Charan)	1.5	49.0
		Kalyanbigha	0.5	48.6
		Harnaut	5.0	49.2
7	132/33 KV Ekangarsarai	Parwalpur	3	49.2
		Islampur	6	49.0
		Ekangarsarai	5	49.0
		Hilsa	4	49.0
8	132/33 KV Katra	Pahari	18	48.6
		Sabalpur	5	48.8
		Karmalichak	8	48.8
		Ashoknagar	14	48.8
		Kankarbag	18	48.6
9	220/132/33 KV Sampatchak	Bahadurpur	14	49.0
		Sampatchak	7	49.0
		Kuda Nawada	10	49.0
10	132/33 KV Purnea	Maranga	12	49.2
		Madhubani	10	49.2
11	132/33 KV Nalanda	Nalanda	6	49.2
12	132/33 KV Rajgir	Raytar	8	49.2

Sl.No.	Frequency	Total Load
1.	49.2	105.5
2.	49.0	101.5
3.	48.8	115.0
4.	48.6	118.5

Thakur 16.11.15
AEE/CRITL

EEE/CRITL 16/11/15

Status of UFR at Sub-stations under Transmission Dept. for the month October '15

Sl No	Name of sub-station	Feeder Details	CD (MVA)	In-service	Test performed	Results/Remarks
1	Burdwan	WBSEB Burdwan	48	Yes	Yes	PT Fuse of the UFR was removed and supply fail alarm appeared
2	Durgapur	Graphite India+ Jai Balaji Industries+ Jai Balaji Sponge	74	No	Yes	PT Fuse of the UFR was removed to avoid unwanted tripping.
3	Durgapur	SRB Steel+ Brahma Alloy+ Venky Steel+ VSP+ Shri Gopal Hi-tech	67	No	Yes	PT Fuse of the UFR was removed to avoid unwanted tripping.
4	Kalyaneswari	BMA+ Impex+ Hira Concast+ MPL	47	Yes	Yes	PT Fuse of the UFR was removed and supply fail alarm appeared
5	Kumardhubi	JSEB Sanjay Chowk+ Mugma+ DPSCO Dishergarh	60	Yes	Yes	PT Fuse of the UFR was removed and supply fail alarm appeared
6	Putki	JSEB Godhar+ Bhuli+ JSEB Ganeshpur+ JSEB Katras+ JSEB Katras Sijua	93.5	Yes	Yes	PT Fuse of the UFR was removed and supply fail alarm appeared
7	Patherdih	JSEB Govindpur + JSEB Mukunda + JSEB Digwadi	70	Yes	Yes	PT Fuse of the UFR was removed and supply fail alarm appeared
8	Ramgarh	JSEB Ramgarh	80	Yes	Yes	PT Fuse of the UFR was removed and supply fail alarm appeared
9	Hazaribagh	JSEB Hazaribagh	50	No	No	Commissioning taken up.
10	Giridih	JSEB Giridih	55	Yes	Yes	PT Fuse of the UFR was removed and supply fail alarm appeared
11	Koderma	JSEB Koderma	38	Yes	Yes	PT Fuse of the UFR was removed and supply fail alarm appeared
		Total load relieved	**682.5 MVA**			

JHARKHAND URJA SANCHARN NIGAM LIMITED

Office of the

Electrical Superintending Engineer, State Load Dispatch Centre,

Kusai Colony, Doranda, Ranchi

Phone: 0651-2490090, Fax: 0651-2490486, Email: sldcranchi@gmail.com

Letter No. 337 **SLDC, Ranchi,** **Dated, the** 12-11-2015

From,

Er. S. S. Mishra
Elect. Supt. Engineer
SLDC, Ranchi.

To,

Member Secretary, ERPC,
14 Golf Club Road,
Tollygunj, KolKata -700033

Sub: **Latest Status of Under Frequency Relay of JUSNL for the month of October' 2015.**

Sir

With reference to the subject mentioned above the latest status of Under Frequency Relay for the month of October' 2015 is hereunder:-

Stage	G/S/S	33 KV Feeder	Remarks
Stage – I 49.2 Hz	Kamdara	Kamdara	In Service
	Gumla	Gumla	In Service
	Deoghar	Sarath	In Service
	Lohardaga	Lohardaga	In Service
	Jamtara	Jamtara	Not In Service
Stage – II 49.0 Hz	Garhwa	Ranka	In Service
	Garhwa	Bhawnathpur	In Service
	Deoghar	Baidyanathpur	In Service
	Lohardaga	Tico	In Service
	Latehar	Manika	In Service
Stage – III 48.8 Hz	Hatia	Brambay	In Service
	Adityapur	Adityapur I	Not In Service
	Japla	Japla	In Service
Stage – IV 48.6 Hz	Namkum	Kokar	In Service
	Hatia	Argora	In Service
	Hatia	Dhurwa	In Service
	Hatia	Harmu	In Service
	Adityapur	Adityapur II	Not In Service

This is for your kind information & necessary action.

Yours faithfully

12/11/15

(S. S. Mishra)
ESE, SLDC, Ranchi

ODISHA POWER TRANSMISSION CORPORATION LIMITED
(A Government of Odisha Undertaking)
CIN-U40102OR2004SGC007553
Regd.Office:Janapath,Bhoinagar,Bhubaneswar-751022
O/O the CGM (O&M),FAX: (0674) – 2542932

NO:TW-GM(O&M)-O/O CGM(O&M) 04/2014 1766(2) Dated/- 06.11.2015

To

The Member Secretary,
ERPC, 14 Golf Club Road,
Tollygunge, Kolkata-700 033

Sub: Monthly Certification for healthiness of UFR relays for the month of OCTOBER'2015.

Sir,

With reference to the above, it is to certify that all the UFR relays installed in 33kV & 132kV system of OPTCL were checked in the month of OCTOBER'2015 and are found to be working normal.

Yours faithfully

06.11.15

Chief General Manager(O&M)

CC to

1. **Sr.GM, (PS), SLDC,Bhubaneswar.**

O/C

West Bengal State Electricity Transmission Company Limited

(A Government of West Bengal Enterprise)

CIN: U40109WB2007SGC113474; Website: www.wbsetcl.in; Phone / Fax No. (033) 2334 9020

Registered Office : Vidyut Bhawan, Block-DJ, Sector-II, Bidhannagar, Kolkata – 700 091

OFFICE OF THE CHIEF ENGINEER

STATE LOAD DESPATCH CENTRE

Memo No. SLDC/HOW/18/ 3188 Date:- 07.11.2015

To
The Member-Secretary ,
Eastern Regional Power Committee,
14, Golf Club Road,
Tollygunge,
Kolkata-700 033.

Sub: Status of UFRs installed at WBSETCL sub-stations.

Dear Sir,

As per deliberation in the 105th OCC meeting of ERPC held on 22.01.15, report on UFRs enunciation, PT fuse and quantum of load in the month of OCT, 2015 connected to the UFR feeders at different WBSETCL sub-stations is furnished herewith for your record.

Thanking you.

Enclo: 1) 5 Nos.

Yours faithfully,

07.11.15

(A. Raichaudhuri)
Chief Engineer, SLDC
WBSETCL

STAGE-I

U/F RELAY SETTING
49.2 HZ

LOAD of the feeders of WBSETCL under 1st stage U/F relay-OCTOBER'15

Sl. No.	Name of Sub-Station	Name of the feeders with load quantum to be tripped by U/F relay			STATUS
		Name of feeders	EVENING MW	MORNING MW	
1	NBU 132 KV	a) 33 KV TCF			D.C. Supply ON. PT fuse O.K.
		b) 33 KV Kharibari	10.0	6.4	
		c) 33 KV Ujanu	16.0	12.0	
		d) 11 KV Teesta	10.0	4.6	
		e) 11 KV Bagdogra	14.2	6.0	
		f) 11 KV Phansidewa #2	3.4	2.5	
2	ULUBERIA 132 KV	a) 33 KV UIGC - 1	5.0	5.0	D.C. Supply ON. PT fuse O.K.
		b) 33 KV Banitabla	16.0	9.5	
		c) 33 KV Foodpark	17.0	15.0	
		d) 33 KV Amta	12.0	8.0	
		e) 33 KV UIGC - 2	11.0	10.0	
3	KALYANI 132 KV	a) 33 KV WBIDC-I	3.0	3.0	D.C. Supply ON. PT fuse O.K.
		b) 33 KV WBIDC-II	6.3	5.0	
		c) 33 KV University - I	16.0	12.0	
		d) 33 KV University - II	11.0	8.0	
		f) 6.3 MVA Tr#1	5.3	4.0	
		g) 5 MVA Tr#2	4.4	3.3	
		h) 5 MVA Tr#3	3.4	2.3	
4	DHARAMPUR 132 KV	a) 33 KV Panpur	12.0	9.1	D.C. Supply ON. PT fuse O.K.
		b) 33 KV Kanchrapara	17.0	13.1	
		c) 33 KV Goalaphatak	14.0	11.0	
		d) 33 KV Cord Road - 1	10.0	13.0	
		e) 33 KV Cord Road - 2	12.0	11.4	
		f) 33 KV Jeerat	12.0	10.2	
5	GANGARAMPUR 132 KV	a) 33 KV Buniadpur-1	13.1	10.2	D.C. Supply ON. PT fuse O.K.
		b) 33 KV Buniadpur-2	15.0	8.0	
		c) 33 KV Salas	12.3	8.0	
		d) 33 KV Rampur	6.0	3.1	
		e) 6.3 MVA (33/11) Tr#1	5.5	3.6	
		f)10MVA TR#1	5.6	6.5	
6	CESC		65.0	65	To be furnished by CESC
		TOTAL	363.5	288.8	

Akbar
05.11.15

STAGE-2

U/F RELAY SETTING
49.0 HZ

LOAD of the feeders of WBSETCL under 2nd stage U/F relay-OCTOBER'15

Sl. No.	Name of Sub-Station	Name of the feeders with load quantum to be			STATUS
		Name of feeders	EVENING MW	MORNING MW	
1	DOMJUR 220 KV	a) 33 KV Jangalpur #1	19.0	19.0	DC SUPPLY ON. PT FUSE O.K.
		b) 33KV Jaladhulaguri#1	20.0	19.0	
		c) 33 KV Munshirhat	12.0	10.0	
2	BAGNAN 231 KV	a) 33 KV Bagnan #1	14.0	10.0	DC SUPPLY ON. PT FUSE O.K.
		b) 33 KV Bagnan #2	13.4	8.6	
		c) 33 KV Amta	22.1	14.0	
		d) 33KV Mugkalyan#1&2	19.2	14.0	
3	MALDA 132 KV	a) 33 KV Narayanpur	20.5	18.0	DC SUPPLY ON. PT FUSE O.K.
		b) 33 KV Habibpur	11.0	9.0	
		c) 33KV Rabindra Bhavan	19.4	14.0	
		d) 33 KV Manikchak	12.6	7.0	
		e) 33 KV KPS	22.0	15.0	
		f) 33 KV Kaliachak	8.0	12.6	
		g) 33 KV Gazole	13.1	10.0	
		h) 1X6.3 MVA Tr#1	11.6	10.0	
		i) 1X5 MVA Tr#2	9.3	8.0	
4	NEW BISHNUPUR 220 KV	a) 33 KV Sonamukhi	10.3	8.3	DC SUPPLY ON. PT FUSE O.K.
		b) 33 KV Rohit	10.3	10.0	
		c) 33 KV Patrashayar	12.6	11.0	
5	BORJORA 132 KV	a) 33 KV Borjora-II	10.4	7.4	DC SUPPLY ON. PT FUSE O.K.
		b) 2X6.3 MVA Tr#1&2	3.0	2.0	
6	CESC		90	90	To be furnished by CESC
		TOTAL	383.8	326.9	

Haldar
05.11.15

STAGE-3

U/F RELAY SETTING
48.8 HZ

LOAD of the feeders of WBSETCL under 3rd stage U/F relay-OCTOBER'15

Sl. No.	Name of Sub-Station	Name of the feeders with load quantum to be			STATUS
		Name of feeders	EVENING MW	MORNING MW	
1	LILUAH 132 KV	a) 33 KV Kona	21	20.0	DC SUPPLY ON. PT FUSE O.K.
		b) 33 KV JNP	11.0	11.0	
		c) 33 KV KTT	19.0	18.0	
		d) 33 KV MKD	16.0	16.0	
		e) 33 KV Baltikuri-1	14.0	14.0	
		f) 33 KV Baltikuri-2	14.0	14.0	
		g) 33 KV Liluah	18.0	16.0	
2	NJP 220 KV	a) 33 KV Radhabari	14.2	10.2	DC SUPPLY ON. PT FUSE O.K.
		b) 33 KV Raninagar	21.1	17.0	
		c) 33 KV Dabgram	17.1	17.1	
		d) 33 KV Fatapukur	8.0	6.4	
		e) 6.3 MVA Tr-1 &2	3.0	3.0	
3	SALT LAKE 132 KV	a) 33 KV M5#1	11.5	12.0	DC SUPPLY ON. PT FUSE O.K.
		b) 33 KV M5#2	11.5	12.7	
4	OLD BISHNUPUR 132 KV	a) 33 KV Kotolpur	12.5	16.0	DC SUPPLY ON. PT FUSE O.K.
		b) 33 KV Jaipur	9.5	12.0	
		c) 33 KV Simlapal	11.5	9.5	
		d) 33 KV Onda	8.0	5.0	
		e) 33 KV Bankadaha	2.5	2.0	
		f) 5 MVA Tr#1 &2	2.5	1.5	
		g) 6.3 MVA Tr#3	3.5	2.2	
5	CESC		120	120	To be furnished by CESC
		TOTAL	369.4	355.6	

Haldar
05.11.15

STAGE-4

U/F RELAY SETTING
48.6 HZ

LOAD of the feeders of WBSETCL under 4th stage U/F relay-OCTOBER'15

Sl. No.	Name of Sub-Station	Name of the feeders with load quantum to be tripped by U/F relay			STATUS
		Name of feeders	EVENING MW	MORNING MW	
1	SILIGURI 132 KV	a) 33 KV Siliguri-I	15.5	13.2	DC SUPPLY ON. PT FUSE O.K.
		b) 33 KV Siliguri-II	19.1	16.0	
		c) 33 KV Rabindranagar-I	13.4	13.0	
		d) 33 KV Housing Board	11.0	10.2	
		e) 33 KV Desbondhu Para	11.0	7.4	
		f) 33 KV Gangadhor	17.0	10.0	
2	DARJEELING 132 KV	a) 33 KV Lebong	4.0	2.0	"
		b) 33 KV Happy Valley	5.0	4.0	
3	JANGIPARA 132 KV	a) 33 KV Jangipara	10.0	7.0	"
		b) 33 KV Siakhala	10.2	6.2	
		c) 33 KV Singti	11.0	6.0	
		h) 6.3 MVA Tr#1	3.0	2.0	
4	TAMLUK 132 KV	a) 33 KV Baraberia	9.0	5.2	"
		b) 33 KV Moyna	11.0	6.1	
		c) 33 KV Gopalpur	22.5	18.3	
		d) 33 KV Tamluk	10.0	6.0	
		e) 6.3 MVA Tr#1 &2	11.3	5.3	
	RISHRA 220 KV	a) 33 KV Dankuni-I&II	23.5	16.5	
		b) 33 KV Kaikala-I&II	8.5	6.0	
		c) 6.3 MVA Tr#1 &2	8.0	8.0	
		d) 6.3 MVA Tr#3 &4	9.4	8.0	
		e) 5 MVA Tr#5	3.5	2.5	
6	CESC		125	125	To be furnished by CESC
	TOTAL		371.9	303.9	

Haldar
05.11.15

STAGE-5

U/F RELAY SETTING
47.6 HZ

LOAD of the feeders of WBSETCL under 5th stage U/F relay-OCTOBER'15

SL. NO.	Name of Feeders	Load (MW)	STSTUS	REMARKS
1	220KV Subhasgram - Laxmikantapur # 1 & 2	304	DC SUPPLY ON. PT FUSE O.K.	LOAD QUANTUM MAY CHANGE ON NETWORK CONFIGURATION.
2	132 KV Ashoknagar - Jeerat # 1 & 2	160	"	LOAD QUANTUM MAY CHANGE ON NETWORK CONFIGURATION.
3	132 KV Arambag - Raina # 1 & 2	86	"	Maximum
4	132 KV Arambag - Birsingha #1 & 2	56	"	Maximum
5	132 KV Durgapur - Bolpur #1 & 2	157	"	LOAD QUANTUM MAY CHANGE ON NETWORK CONFIGURATION.
	Total	763		

Aaldar
05.11.15

Sys/Con: 911

3rd November, 2015

Member Secretary
Eastern Regional Power Committee,
14, Golf Club Road
Tollygunge
Kolkata – 700 033

Re: UNDERFREQUENCY

Dear Sir,

We hereby confirm that all U/F relays and SPS including Islanding Scheme of CESC Generating Stations installed in our system are healthy and in commission.

Please also note that there was no under frequency operation for the month of **October, 2015**.

Yours faithfully,

SR. MANAGER
SYSTEM CONTROL

cc: The General Manager
Eastern Regional Load Despatch Centre,
14, Golf Club Road
Tollygunge
Kolkata – 700 033

Annexure- B.7

पावर ग्रिड कारपोरेशन ऑफ इंडिया लिमिटेड
(भारत सरकार का उद्यम)
POWER GRID CORPORATION OF INDIA LIMITED
(A Government of India Enterprise)
पावरग्रिड

27, शहीद नगर, भुवनेश्वर (ओडिशा) - 751 007
दुरभाष: 2548586, 2548174, फैक्स: 0674-2548586
27, Saheed Nagar, Bhubaneswar (Odisha) - 751 007
Tel.- 2548586, 2548174, Fax. No. 0674-2548586

Ref. No: ER-II/ODP/AM/ **Date: 18.11.2015**

To

The Member Secretary,
Eastern Region Power Committee
14, Golf Club Road, Tollygunj,
Kolkata-700033

Sub: Tentative Programme for replacement of Porcelain insulators with Polymer insulators in the transmission lines of POWERGRID, Odisha.

Dear Sir,

Attached please find here with the tentative schedule for replacement of porcelain insulators with polymer insulators in the transmission lines of POWERGRID, Odisha. This is for your kind information please.

Thanking You.

Yours faithfully,

18/11/15

(A. K. Behera)
DGM(AM), Odisha

TENTATIVE SCHEDULE OF REPLACEMENT OF PORCELAIN INSULATORS WITH POLYMER INSULATORS IN THE LINES OF POWERGRID, ODISHA.

Sl. No.	Name of Line	Line Length (Km)	Voltage (kV)	Programme for Replacement
1	400kV Rourkela – Raigarh I & II D/C Line	187	400	Dec'15 – Mar'16
2	400kV Rourkela – Raigarh III & IV D/C Line	215	400	Dec'15 – Mar'16
3	400kV Jeypore – Indravati S/C Line	74.3	400	Dec'15 - Apr'16
4	400kV Jeypore – Bolangir S/C Line	309.5	400	Dec'15 - Apr'16
5	400kV Rengali – Indravati S/C Line	356	400	Jan'16 – May'16
6	400kV Talcher- Rengali D/C Line	25	400	
7	400kV Talcher – Rourkela D/C Line	171	400	
8	400kV Angul – Bolangir S/C Line	299	400	
9	400kV LILO at Bolangir	22	400	
10	± 500kV HVDC Talcher – Kolar Line	300	500	Jan'16 – Jan'17

Annexure- B.11

IND-BARATH ENERGY (UTKAL) LIMITED

Registered Office : Plot No. 30-A, Road No. 1, Film Nagar, Jubilee Hills, Hyderabad - 500 096. T.S., INDIA
Phone : 91-40-45451100, 45451101, E-mail : ibpil@ibpil.com

IBPIL
towards brighter nation

Shri Ankan Kumar Bandyopadhyaya
Member Secretary
Eastern Region Power Committee
14, Golf Club Road, Tollygunj
Kolkata

Date: 19.11.15

Sub: Status of commissioning of Ind-Barath Power Plant and 400 kV, Jharsuguda D/C line

Sir,

This is in reference to 115th OCC of ERPC on 20th November 2015 and my telephonic discussion on the progress of Ind-Barath.

Status of power plant and the dedicated 400 kV double circuit line is given below for your kind information and necessary action.

AA. COMMISSIONING STATUS OF UNIT # I (350 MW):

1. Modifications in 16 nos coal / oil burners were carried out by the help of manufacturer, M/s Cethar Vessels Ltd by installing refractory coatings. Flame diverters made of SS were also installed. All these burners were re-aligned and positioned.

2. Unit was synchronized on 16.11.15 at 20:10 Hrs and continued up to 24:06 Hrs of 17.11.15 with a maximum load of 53 MW.

3. QC NRV of Cold Re Heater Line (CRH) did not open while further raising the load. Therefore, the Unit was shutdown to attend the same. This was rectified and made operational.

4. Although, the unit is ready today (19.11.15) due to district level local strike and political unrest in the vicinity, the Unit could not be started today. It is planned to light up the Unit, late night and is expected to be synchronized by noon of 20.11.15 and shall be raised to higher loads.

BB. COMMISSIONING STATUS OF UNIT # II

1. Non-drainable hydro of Boiler achieved by 307.5 Kg/Cm2 to be statutorily approved by 20.12.15.

2. Boiler light up is expected in December, 2015.

Project Office: Plot No. 249, Unit-3, Kharvela Nagar, Bhubaneshwar - 751 001. ORISSA.
Ph.: 0674-2532164, Fax: 0674-2532174 E-mail: bbsr@ibpil.co.in
CIN : U40105TG2006PLC056638

CC. COMMISSIONING OF 400 kV DEDICATED TRANSMISSION LINE:

1. **FOUNDATIONS:**- As per our commitment, all the 125 nos foundations have been completed.

Due to route alignment, one more tower has been increased, thus the total numbers of towers have become 126. The 126th tower is under ROW negotiation.

2. **ERECTION:-** 118 nos out of 126 have been completed and two nos under progress will be completed by 21.11.15.

3. **STRINGING:**- Out of 39.74 Kms; the stringing of 32 Kms has been achieved.

CONCLUSION:-

While erecting the tower, failure of string caused fatal accident of one person and injury to two persons for which the job got severely affected. Also, due to ROW problem and paddy cultivation, the progress is getting severely affected.

We expect to complete the transmission line by end December, 2015 and presently we are endeavoring to achieve full load by overcoming the commissioning problems of the plant.

Solicit your support and kind cooperation in this regard.

Regards,

J Mohapatra
Director-Technical

Annexure- B.12

पावर ग्रिड कारपोरेशन ऑफ इंडिया लिमिटेड
(भारत सरकार का उद्यम)
POWER GRID CORPORATION OF INDIA LIMITED
(A Government of India Enterprise)
पावरग्रिड

पूर्वी क्षेत्र पारेषण प्रणाली-I मुख्यालय : अलंकार प्लेस (द्वितीय, पाँचवा व छठा तल), बोरिंग रोड, पटना-800 001
दूरभाष : 0612-2231071, 2233140, फैक्स : 0612-2228984
Eastern Region Transmission System-I H.Q.: Alankar Place (2nd, 5th & 6th Floor), Boring Road, Patna-800 001
Tel.: 0612 - 2231071, 2233140 Fax : 0612 - 2228984

Ref. No.: ER-I/PAT/AM(ER-I)/ **Date : 09.10.2015**

To

Member Secretary,
Eastern Regional Power Committee,
14, Golf Club Road, Tollygunj, Kolkata-700033

Sub: **Tentative cost estimate for one time restoration of PLCC system of STUs Tie lines in Eastern Region-I.**

Dear Sir,

This is with reference to the letter ref. no. ERPC/MS/2015 Dated 05.10.2015 regarding cost estimate for one time restoration of PLCC system of 220 KV tie lines of STUs whose PLCC are non operational for some or other reason. As communicated earlier, following tie lines of STUs have been identified whose PLCC system at STU end are non operational.

1) 220KV Ranchi-Chandil-I&II
2) 220 KV Ranchi-Hatia-I&II
3) 220 KV Patna-Fathua
4) 220 kv Patna-Khagaul
5) 220 kv Gaya-Bodhgaya-I&II
6) 220 KV Gaya-Dehri-I&II

Accordingly a tentative cost estimate has been prepared based on the survey report by POWERGRID engineer of respective STUs substation. The total tentative cost for one time restoration of PLCC of BSPTCL system comes to Rs 8197000/- and for JUSNL system comes to Rs 468400/-. Details of tentative cost estimate are attached as annexure-I&II. However, actual expenditure for one time restoration of PLCC system will be based on the actual procurement/ work done as per POWERGRID standard practice and visit of service engineer of respective OEM.

This is for your kind information and further necessary action please.

Thanking you.

Yours faithfully,

09/X/15

(S.K.Singh)
DGM (AM)/ER-I

Annexure-I

ESTIMATE FOR ONE TIME RESTORATION OF PLCC OF BSPTCL

S.NO.	ITEM DESCRIPTION	UNIT	QTY	AMOUNT	REMARKS
BODHGAYA AND DEHRI S/S					
1	Supply, Erection and commissioing of 220KV CVT alongwith support structure.	NO.	4	1500000	02 NOS-DEHRI AND 02 NOS-BODHGAYA
2	Supply, Erection and commissioing of Wave trap alongwith support structure and BPI.	NO.	4	2500000	02 NOS-DEHRI AND 02 NOS-BODHGAYA
3	Supply and laying of HF CABLE	KM	1	250000	FOR BOTH DEHRI AND BODHGAYA
4	Supply, laying and termination of CABLE (5CX2.5 SQ MM) BETWEEN RELAY PANEL TO PLCC	KM	1	300000	FOR BOTH DEHRI AND BODHGAYA
5	CLAMPS AND CONNECTOR FOR CVT AND WAVETRAP	NO.	8	150000	04 NOS. CVT AND 04 NOS- WT
6	JUMPER CONDUCTOR	NO.	8	150000	04 NOS. CVT AND 04 NOS- WT
7	DEPUTATION OF RELAY ENGINEER	DAYS	6	300000	03 DAYS EACH FOR DEHRI AND BODHGAYA
8	DEPUTATION OF PLCC ENGINEER	DAYS	6	300000	03 DAYS EACH FOR DEHRI AND BODHGAYA
9	CVT FOUNDATION	NO.	2	400000	01 NOS-DEHRI AND 01 NOS-BODHGAYA
10	MISCELLANEOUS	LS		150000	
SUB TOTAL(A)				**6000000**	
KHAGAUL AND FATHUA S/S					
1	Supply, installation and commissioning of LMU	NO.	2	500000	01 NO.-KHAGAUL AND 01 NO. -FATHUA
2	DEPUTATION OF SERVICE ENGINEER	LS		300000	02 days for kahgaul and 02 days for fathua
3	REPAIR OF PLCC CARDS	LS		100000	
4	MISCELLANEOUS	LS		100000	
SUB TOTAL(B)				**1000000**	
SUB TOTAL (A+B)				**7000000**	
POWERGRID CONSULTANCY FEE@15%				**1050000**	
SERVICE TAX ON CONSULTANCY FEE				**147000**	
TOTAL EXCLUDING TAXES AND DUTIES OF EACH ITEM				**8197000**	

Annexure-II

ESTIMATE FOR ONE TIME RESTORATION OF PLCC OF JSUNL

S.NO.	ITEM DESCRIPTION	UNIT	QTY	AMOUNT	REMARKS
CHANDIL AND HATIA S/S					
1	Deputation of service engineer for PLCC	DAYS	6	300000	02 DAYS-HATIA AND 02 DAYS-CHANDIL
2	Miscellaneous	LS		100000	
SUB TOTAL				400000	
POWERGRID CONSULTANCY FEE@15%				60000	
SERVICE TAX ON CONSULTANCY FEE				8400	
TOTAL EXCLUDING TAXES AND DUTIES OF EACH ITEM				468400	

पावर ग्रिड कारपोरेशन ऑफ इंडिया लिमिटेड
(भारत सरकार का उद्यम)
POWER GRID CORPORATION OF INDIA LIMITED
(A Government of India Enterprise)
पावरग्रिड

J-1-15, Block- EP, Sector-V, Salt Lake City, Kolkata – 700 091.
Tel. (033) 2357-2822, (033) 2357-2822 (Fax)

Ref : ER-II/KOL/AM/2015 **Date: 15.10.2015**

To,
The Member Secretary
Eastern Region Power Committee
14, Golf Club Road, Tollygunj,
Kolkata-700033

Sub: Tentative cost estimate for one time restoration of PLCC system of STUs Tie Lines in Eastern Region-II.

Dear Sir,

This has reference to the letter ref. no. ERPC/MS/2015 Dated 05.10.2015 regarding cost estimate for one time restoration of PLCC system of the tie lines of STUs, for which PLCC are non-operational/ not available for some or other reason.

The following tie lines of the STU systems were identified

WBSETCL System:

1. 132KV Siliguri-NBU line.
2. 132KV Siliguri-NJP line.
3. 132KV Siliguri-Karsiang line.
4. 132KV Malda-Malda D/C line.
5. 132KV Birpara-Birpara D/C line.

Sikkim System:

1. 132KV Siliguri-Meli line.

Accordingly, a tentative cost estimate has been prepared based on the survey report of POWERGRID engineer of respective STU station. The total tentative cost for one time restoration of PLCC of WBSETCL system comes to Rs. 2,91,50,141.00 and for Sikkim syetm comes to Rs. 57,41,469.00. Details of tentative cost estimate are attached as Annex-I & II. However, actual expenditure for one time restoration of PLCC system will be based on the actual procurement/ work done as per POWERGRID standard practice and visit of service engineer of respective OEM.

This is for your kind information and further necessary action please.

Thanking you.

Yours faithfully

Jiten Das 15/10/15
Asst.GM (AM)

Annexure - 1

ESTIMATE FOR ONE TIME RESTORATION OF PLCC OF WBSETCL

Sl No.	Items Description	Unit	Qty.	Amount	Remarks
A.	**132KV SILIGURI NBU LINE**				
1	Supply , Erection and Commissioning of PLCC Pane	NO	4	1411986.00	
2	Supply, Erection and Commissioining of 132KV CVT alongwith support structure	NO	2	470022.00	
3	Supply , Erection and Commissioning of Wave Trap support structure and BPI	NO	4	954504.00	
4	Supply and Erection of Coupling Device	No.	2	92241.00	
5	Supply and Laying of HF Cable	KM	2	271034.00	1km length SLG and 1km at NBU
6	Supply, Laying and termination of CABLE (14CX2.5Sqmm) between relay panel to PLCC	KM	1	336342.00	0.5 km length SLG and 0.5km at NBU
7	Clamps and Connector for Wave Trap & cvt	NO	6	112500.00	
8	Jumper Conductor	NO	6	112500.00	
9	Deputation of Relay Engineer	Days	6	300000.00	3days at SLG and 3 Days at NBU
10	Deputation of PLCC Engineer	Days	8	400000.00	4 Days at SLG and 4 Days at NBU
11	Supply, Erection and Commissioining of 48V Battery system	SET	1	123573.00	
12	Supply, erection and Commissioning of 48V Battery Charger	No.	1	363368.00	
13	CVT Foundation	Nos	2	200000.00	
14	Miscellaneous	LS		300000.00	
	Sub Total A			5448070.00	

B.	132KV SILIGURI NJP LINE				
1	Supply , Erection and Commissioning of PLCC Panel	NO	4	1411986.00	
2	Supply, Erection and Commissioining of 132KV CVT alongwith support structure	NO	2	470022.00	
3	Supply , Erection and Commissioning of Wave Trap support structure and BPI	NO	4	954504.00	
4	Supply and Erection of Coupling Device	No.	2	92241.00	
5	Supply and Laying of HF Cable	KM	2	271034.00	1km length SLG and 1km at NJP

6	Supply, Laying and termination of CABLE (14CX2.5Sqmm) between relay panel to PLCC	KM	1	336342.00	0.5 km length SLG and 0.5km at NJP
7	Clamps and Connector for Wave Trap & cvt	NO	6	112500.00	
8	Jumper Conductor	NO	6	112500.00	
9	Deputation of Relay Engineer	Days	6	300000.00	3days at SLG and 3 Days at NJP
10	Deputation of PLCC Engineer	Days	8	400000.00	4 Days at SLG and 4 Days at NJP
11	Supply, Erection and Commissioining of 48V Battery system	SET	1	123573.00	
12	Supply, erection and Commissioning of 48V Battery Charger	No.	1	363368.00	
13	CVT Foundation	Nos	2	200000.00	
14	Miscellaneous	LS		300000.00	
	Sub Total B			5448070.00	
C.	**132KV SILIGURI KERSIANG LINE**				
1	Supply , Erection and Commissioning of PLCC Panel	NO	4	1411986.00	
2	Supply, Erection and Commissioining of 132KV CVT alongwith support structure	NO	2	470022.00	
3	Supply , Erection and Commissioning of Wave Trap support structure and BPI	NO	4	954504.00	
4	Supply and Erection of Coupling Device	No.	2	92241.00	
5	Supply and Laying of HF Cable	KM	2	271034.00	1km length SLG and 1km at Kersiang
6	Supply, Laying and termination of CABLE (14CX2.5Sqmm) between relay panel to PLCC	KM	1	336342.00	0.5 km length SLG and 0.5km at Kersiang
7	Clamps and Connector for Wave Trap & cvt	NO	6	112500.00	
8	Jumper Conductor	NO	6	112500.00	
9	Deputation of Relay Engineer	Days	6	300000.00	3days at SLG and 3 Days at Kersiang
10	Deputation of PLCC Engineer	Days	8	400000.00	4 Days at SLG and 4 Days at Kersiang
11	Supply, Erection and Commissioining of 48V Battery system	SET	1	123573.00	
12	Supply, erection and Commissioning of 48V Battery Charger	No.	1	363368.00	
13	CVT Foundation	Nos	2	200000.00	
14	Miscellaneous	LS		300000.00	

	Sub Total C			5448070.00	
D.	**132KV MALDA-MALDA D/C LINE**				
1	Supply , Erection and Commissioning of PLCC Panel	NO	6	2256540.00	2 NO.PLCC PANEL WITH PROTECTION COUPLER AND 1 NO. PLCC WITH SPEECH AND DATA HAS BEEN CONSIDERED AT EACH STATION.
2	Supply, Erection and Commissioining of 132KV CVT alongwith support structure	NO	2	470022.00	
3	Supply , Erection and Commissioning of Wave Trap support structure and BPI	NO	4	954504.00	
4	Supply and Erection of Coupling Device	No.	2	92241.00	
5	Supply and Laying of HF Cable	KM	2	271034.00	1km length MALDA and 1km at MLD.
6	Supply, Laying and termination of CABLE (14CX2.5Sqmm) between relay panel to PLCC	KM	1	336342.00	0.5 km length MALDA and 0.5km at MLD.
7	Clamps and Connector for Wave Trap & cvt	NO	6	112500.00	
8	Jumper Conductor	NO	6	112500.00	
9	Deputation of Relay Engineer	Days	6	300000.00	3days at MALDAand 3 Days at MLD.
10	Deputation of PLCC Engineer	Days	8	400000.00	4 Days at MALDA and 4 Days at MLD.
11	Supply, Erection and Commissioining of 48V Battery system	SET	1	123573.00	
12	Supply, erection and Commissioning of 48V Battery Charger	No.	1	363368.00	
13	CVT Foundation	Nos	2	200000.00	
14	Miscellaneous	LS		300000.00	
	Sub Total D.			6292624.00	
E.	**132KV BIRPARA-BIRPARA D/C LINE**				
1	Supply , Erection and Commissioning of PLCC Panel	NO	6	2256540.00	2 NO.PLCC PANEL WITH PROTECTION COUPLER AND 1 NO. PLCC WITH SPEECH AND DATA HAS BEEN CONSIDERED AT EACH STATION.
2	Supply, Erection and Commissioining of 132KV CVT alongwith support structure	NO	2	470022.00	
3	Supply , Erection and Commissioning of Wave Trap support structure and BPI	NO	4	954504.00	
4	Supply and Erection of Coupling Device	No.	2	92241.00	

5	Supply and Laying of HF Cable	KM	2	271034.00	1km length BIRPARA and 1km at BRP.
6	Supply, Laying and termination of CABLE (14CX2.5Sqmm) between relay panel to PLCC	KM	1	336342.00	0.5 km length BIRPARA and 0.5km at BRP.
7	Clamps and Connector for Wave Trap & cvt	NO	6	112500.00	
8	Jumper Conductor	NO	6	112500.00	
9	Deputation of Relay Engineer	Days	6	300000.00	3days at BIRPARAand 3 Days at BRP.
10	Deputation of PLCC Engineer	Days	8	400000.00	4 Days at BIRPARA and 4 Days at BRP
11	Supply, Erection and Commissioining of 48V Battery system	SET	1	123573.00	
12	Supply, erection and Commissioning of 48V Battery Charger	No.	1	363368.00	
13	CVT Foundation	Nos	2	200000.00	
14	Miscellaneous	LS		300000.00	
Sub Total E.				6292624.00	
Sub Total (A+B+C+D+E)				24893374.00	
POWERGRID CONSULTANCY FEE @ 15%				3734006.10	
SERVICE TAX ON CONSULTANCY FEE @ 14%				522760.85	
TOTAL EXCLUDING TAXES AND DUTIES OF EACH ITEM				29150140.95	

Annex-II

ESTIMATE FOR ONE TIME RESTORATION OF PLCC PANEL OF SIKKIM

Sl No.	Items Description	Unit	Qty.	Amount	Remarks
1	Supply , Erection and Commissioning of PLCC Pane	NO	4	1411986.00	The protection panels available are old and obsolete. 1 no. PLCC panel with Speech+ data & 1 no. PLCC panel with Speech+ Data+ Protection coupler has been considered each at Siliguri & Meli.
2	Supply , Erection and Commissioning of Wave Trap support structure and BPI	NO	4	1154504.00	
3	Supply and Erection of Coupling Device	No.	2	92241.00	
4	Supply and Laying of HF Cable	KM	2	271034.00	1km length SLG and 1km at Melli
5	Supply, Laying and termination of CABLE (14CX2.5Sqmm) between relay panel to PLCC	KM	1	336342.00	0.5 km length SLG and 0.5km at Melli
6	Clamps and Connector for Wave Trap	NO	4	75000.00	
7	Jumper Conductor	NO	4	75000.00	
8	Deputation of Relay Engineer	Days	6	300000.00	3days at SLG and 3 Days at Melli
9	Deputation of PLCC Engineer	Days	8	400000.00	4 Days at SLG and 4 Days at Melli
10	Supply, Erection and Commissioining of 48V Battery system	SET	1	123573.00	
11	Supply, erection and Commissioning of 48V Battery Charger	No.	1	363368.00	
12	Miscellaneous	LS		300000.00	
Total				4903048.00	
POWERGRID CONSULTANCY FEE@15%				735457.2	
Service Tax on Consultancy Fee@14%				102964.008	
Total Excluding Taxes and Duties of Each Item				5741469.21	

पावर ग्रिड कारपोरेशन ऑफ इंडिया लिमिटेड
(भारत सरकार का उद्यम)
POWER GRID CORPORATION OF INDIA LIMITED
(A Government of India Enterprise) पावरग्रिड
27, शहीद नगर, भुवनेश्वर (ओडिशा)-751007
दुरभाष: (0674) 2548586, 2548174, फैक्स: 2548586
27, Saheed Nagar, Bhubaneswar (Odisha)-751007
Tel: (0674) 2548586, 2548174, Fax: 2548586

Ref : ER-II/ODP/AM/2015 **Date: 06.11.2015**

To,
The Member Secretary
Eastern Region Power Committee
14, Golf Club Road, Tollygunj,
Kolkata-700033

Sub: Tentative cost estimate for one time restoration of PLCC system of STUs Tie Lines in Odisha.

Dear Sir,
This has reference to the letter ref. no. ERPC/MS/2015 Dated 05.10.2015 regarding cost estimate for one time restoration of PLCC system of the tie lines of STUs, for which PLCC are non-operational/ not available for some or other reason.

The following lines of the STU systems (OPTCL) were identified:
1) 400KV Indravati(PG)-Indravati(OHPC) Line.
2) 220KV Jeypore(PG)-Jaynagar(OPTCL) D/C line.
3) 220KV Rengali(PG)-Rengali(OPTCL) D/C Line.
4) 220KV Rourkela(PG)- Tarkera(OPTCL) D/C line.
5) 132KV Baripada(PG)- Rairangpur(OPTCL) S/C line.
6) 132KV Baripada(PG)- Baripada(OPTCL) S/C line.

Accordingly, a tentative cost estimate has been prepared based on the survey report of POWERGRID engineer on PLCC of respective OPTCL lines. The total tentative cost for one time restoration of PLCC of OPTCL system comes to Rs.6,23,86,512.00. Details of tentative cost estimate are attached as Annex-I. However, actual expenditure for one time restoration of PLCC system will be based on the actual procurement/ work done as per POWERGRID standard practice and visit of service engineer of respective OEM.

This is for your kind information and further necessary action please.

Thanking you.

Yours faithfully

06/11/15
(A.K.Behera)
DGM (AM)

Encl : As above.

Annexure-I

ESTIMATE FOR ONE TIME RESTORATION OF PLCC OF OPTCL LINES CONNECTING POWERGRID S/S

SUMMARY

SL.NO.	NAME OF LINE	COST ESTIMATE (Rs.)
A	400KV INDRAVATI(PG) - INDRAVATI(OHPC) S/C LINE	7732249.00
B	220KV JEYPORE(PG) - JAYNAGAR(OPTCL) D/C LINE	10898188.00
C	220KV RENGALI(PG) - RENGALI(OPTCL) D/C LINE	11958591.00
D	220 KV ROURKELA(PG) - TARKERA(OPTCL) D/C LINE	10850453.50
E	132KV BARIPADA(PG)- RAIRANGPUR(OPTCL) S/C LINE	5918394.00
F	132KV BARIPADA(PG) - BARIPADA(OPTCL) S/C LINE	5918394.00
	TOTAL :	**53276269.50**
	POWERGRID Consultancy fee @15 % :	7991440.43
	Service tax on Consultancy fee @ 14 % :	1118801.66
	Grand Total Excluding taxes & duties of each item :	**62386511.58**

05/11/15
(S.K. Naik)
Ch. Mgr (AM)
Bhubaneswar.

ESTIMATE FOR ONE TIME RESTORATION OF PLCC OF OPTCL LINES CONNECTING POWERGRID S/S

Sl No.	Items Description	Unit	Qty.	Unit Rate	Amount	Remarks
A.	400KV INDRAVATI(PG) - INDRAVATI(OHPC) S/C LINE					
1	Supply , Erection and Commissioning of PLCC Panel.	NO	6	352996.5	2117979.00	2 NO.PLCC PANEL WITH PROTECTION COUPLER AND 1 NO. PLCC WITH SPEECH AND DATA HAS BEEN CONSIDERED AT EACH STATION.
2	Supply, Erection and Commissioining of 420KV CVT	NO	4	376253	1505012.00	2 NOS CVT AT EACH STATION FOR PHASE TO PHASE COUPLING.
3	Supply , Erection and Commissioning of 420KV Wave Trap	NO	4	268735	1074940.00	2 NOS WAVE TRAP AT EACH STATION FOR PHASE TO PHASE COUPLING.
4	Supply and Erection of Coupling Device	No.	4	92241	368964.00	2 NOS AT EACH STATION
5	Supply and Laying of HF Cable	KM	4	135517	542068.00	1km length at PG end and 3km at OHPC end
6	Supply, Laying and termination of CABLE (14CX2.5Sqmm) between relay panel to PLCC	KM	1	336345	336345.00	0.5 km length PG end and 0.5km at OHPC end.
7	Clamps and Connector for Wave Trap & CVT	NO	8	18750	150000.00	
8	Jumper Conductor	NO	8	18750	150000.00	
9	Deputation of Relay Engineer	Days	6	50000	300000.00	3days at PG and 3 Days at OHPC end
10	Deputation of PLCC Engineer	Days	8	50000	400000.00	4 Days at PG end and 4 Days at OHPC end
11	Supply, Erection and Commissioining of 48V Battery system	SET	1	123573	123573.00	
12	Supply, erection and Commissioning of 48V Battery Charger	No.	1	363368	363368.00	
13	Miscellaneous (EARTHING FLAT, NUT BOLTS ETC)	LS		300000	300000.00	
	Sub Total (A) :				7732249.00	

ESTIMATE FOR ONE TIME RESTORATION OF PLCC OF OPTCL LINES CONNECTING POWERGRID S/S

Sl No.	Items Description	Unit	Qty.	Unit Rate	Amount	Remarks
B.	220KV JEYPORE(PG) - JAYNAGAR(OPTCL) D/C LINE					
1	Supply , Erection and Commissioning of PLCC Panel.	NO	6	352996.5	2117979.00	2 NO.PLCC PANEL WITH PROTECTION COUPLER AND 1 NO. PLCC WITH SPEECH AND DATA HAS BEEN CONSIDERED AT EACH STATION.
2	Supply, Erection and Commissioining of 245KV CVT.	NO	8	283152	2265216.00	4 NOS CVT AT EACH STATION FOR PHASE TO PHASE COUPLING.
3	Supply , Erection and Commissioning of Wave Trap	NO	8	231717	1853736.00	4 NOS WAVE TRAP AT EACH STATION FOR PHASE TO PHASE COUPLING.
4	Supply and Erection of Coupling Device	No.	8	92241	737928.00	4 NOS AT EACH STATION
5	Supply and Laying of HF Cable	KM	6	135517	813102.00	2km length PG end and 4km at JAYNAGAR end
6	Supply, Laying and termination of CABLE (14CX2.5Sqmm) between relay panel to PLCC	KM	1	336345	336345.00	0.5 km length PG end and 0.5km at JAYNAGAR
7	Clamps and Connector for Wave Trap & CVT	NO	16	18750	300000.00	
8	Jumper Conductor	NO	16	18750	300000.00	
9	Deputation of Relay Engineer	Days	8	50000	400000.00	4days at PG end and 4 Days at JAYNAGAR
10	Deputation of PLCC Engineer	Days	10	50000	500000.00	5 Days at PG end and 5 Days at JAYNAGAR
11	Supply, Erection and Commissioning of 48V Battery system	SET	2	123973	247946.00	
12	Supply, erection and Commissioning of 48V Battery Charger	No.	2	363368	726736.00	
13	Miscellaneous (EARTHING FLAT, NUT BOLTS ETC)	LS		300000	300000.00	
	Sub Total (B) :				10898188.00	

ESTIMATE FOR ONE TIME RESTORATION OF PLCC OF OPTCL LINES CONNECTING POWERGRID S/S

Sl No.	Items Description	Unit	Qty.	Unit Rate	Amount	Remarks
C.	220KV RENGALI(PG) - RENGALI(OPTCL) D/C LINE					
1	Supply , Erection and Commissioning of PLCC Panel.	NO	6	352996.5	2117979.00	2 NO.PLCC PANEL WITH PROTECTION COUPLER AND 1 NO. PLCC WITH SPEECH AND DATA HAS BEEN CONSIDERED AT EACH STATION.
2	Supply, Erection and Commissioining of 245KV CVT alongwith support structure.	NO	8	300464	2403712.00	4 NOS CVT AT EACH STATION FOR PHASE TO PHASE COUPLING.
3	Supply , Erection and Commissioning of Wave Trap, support structure and BPI	NO	8	263895	2111160.00	4 NOS WAVE TRAP AT EACH STATION FOR PHASE TO PHASE COUPLING.
4	Supply and Erection of Coupling Device	NO	8	92241	737928.00	4 NOS AT EACH STATION
5	Supply and Laying of HF Cable	KM	5	135517	677585.00	2km length PG and 3km at OPTCL end
6	Supply, Laying and termination of CABLE (14CX2.5Sqmm) between relay panel to PLCC	KM	1	336345	336345.00	0.5 km length PG and 0.5km at OPTCL end.
7	Clamps and Connector for Wave Trap & CVT	NO	16	18750	300000.00	
8	Jumper Conductor	NO	16	18750	300000.00	
9	Deputation of Relay Engineer	Days	8	50000	400000.00	4days at PG and 4 Days at OPTCL
10	Deputation of PLCC Engineer	Days	10	50000	500000.00	5 Days at PG and 5 Days at OPTCL
11	Supply, Erection and Commissioining of 48V Battery system	SET	2	123573	247146.00	
12	Supply, erection and Commissioning of 48V Battery Charger	No.	2	363368	726736.00	
13	CVT Foundation	Nos	8	100000	800000.00	
14	Miscellaneous (EARTHING FLAT, NUT BOLTS ETC)	LS		300000	300000.00	
	Sub Total (C) :				11958591.00	

ESTIMATE FOR ONE TIME RESTORATION OF PLCC OF OPTCL LINES CONNECTING POWERGRID S/S

Sl No.	Items Description	Unit	Qty.	Unit Rate	Amount	Remarks
D.	220 KV ROURKELA(PG) - TARKERA(OPTCL) D/C LINE					
1	Supply , Erection and Commissioning of PLCC Panel (single channel)	NO	6	352996.5	2117979.00	2 NO.PLCC PANEL WITH PROTECTION COUPLER AND 1 NO. PLCC WITH SPEECH AND DATA HAS BEEN CONSIDERED AT EACH STATION.
2	Supply, Erection and Commissioining of 245KV CVT	NO	8	283152	2265216.00	4 NOS CVT AT EACH STATION FOR PHASE TO PHASE COUPLING.
3	Supply , Erection and Commissioning of Wave Trap	NO	8	231717	1853736.00	4 NOS WAVE TRAP AT EACH STATION FOR PHASE TO PHASE COUPLING.
4	Supply and Erection of Coupling Device	No.	8	92241	737928.00	4 NOS AT EACH STATION
5	Supply and Laying of HF Cable	KM	8	135517	1084136.00	4km length RKL and 4km at Tarkera end
6	Supply, Laying and termination of CABLE (14CX2.5Sqmm) between relay panel to PLCC	KM	1.5	336345	504517.50	0.5 km length RKL and 1 km at Tarkera
7	Clamps and Connector for Wave Trap & CVT	SET	16	18750	300000.00	
8	Jumper Conductor	NO	16	18750	300000.00	
9	Deputation of Relay Engineer	Days	8	50000	400000.00	4days at RKL and 4 Days at Tarkera
10	Deputation of PLCC Engineer	Days	10	50000	500000.00	5 Days at RKL and 5 Days at Tarkera
11	Supply, Erection and Commissioining of 48V Battery system	SET	1	123573	123573.00	
12	Supply, Erection and Commissioning of 48V Battery Charger	No.	1	363360	363360.00	
13	Miscellaneous (EARTHING FLAT, NUT BOLTS ETC)	LS		300000	300000.00	
	Sub Total (D) :				10850453.50	

ESTIMATE FOR ONE TIME RESTORATION OF PLCC OF OPTCL LINES CONNECTING POWERGRID S/S

Sl No.	Items Description	Unit	Qty.	Unit Rate	Amount	Remarks
E.	132KV BARIPADA(PG)- RAIRANGPUR(OPTCL) S/C LINE					
1	Supply , Erection and Commissioning of PLCC Panel.	NO	4	352996.5	1411986.00	1 NO.PLCC PANEL WITH PROTECTION COUPLER AND 1 NO. PLCC WITH SPEECH AND DATA HAS BEEN CONSIDERED AT EACH STATION.
2	Supply, Erection and Commissioining of 245KV CVT alongwith support structure	NO	4	235011	940044.00	2 NOS CVT AT EACH STATION FOR PHASE TO PHASE COUPLING.
3	Supply , Erection and Commissioning of Wave Trap support structure and BPI	NO	4	238626	954504.00	2 NOS WAVE TRAP AT EACH STATION FOR PHASE TO PHASE COUPLING.
4	Supply and Erection of Coupling Device	No.	4	92241	368964.00	2 NOS AT EACH STATION
5	Supply and Laying of HF Cable	KM	3	135517	406551.00	1km length BARIPADA and 2km at RAIRANGPUR.
6	Supply, Laying and termination of CABLE (14CX2.5Sqmm) between relay panel to PLCC	KM	1	336345	336345.00	0.5 km length BARIPADA and 0.5km at RAIRANGPUR.
7	Clamps and Connector for Wave Trap & CVT	SET	8	18750	150000.00	
8	Jumper Conductor	NO	8	18750	150000.00	
9	Deputation of Relay Engineer	Days	8	50000	400000.00	4 Days at BARIPADA and 4Days at BALASORE.
10	Deputation of PLCC Engineer	Days	10	50000	500000.00	5 Days at BARIPADA and 5 Days at BALASORE.
11	Miscellaneous	LS		300000	300000.00	
	Total (F) :				5918394.00	

ESTIMATE FOR ONE TIME RESTORATION OF PLCC OF OPTCL LINES CONNECTING POWERGRID S/S

Sl No.	Items Description	Unit	Qty.	Unit Rate	Amount	Remarks
F.	132KV BARIPADA(PG) - BARIPADA(OPTCL) S/C LINE					
1	Supply , Erection and Commissioning of PLCC Panel.	NO	4	352996.5	1411986.00	1 NO.PLCC PANEL WITH PROTECTION COUPLER AND 1 NO. PLCC WITH SPEECH AND DATA HAS BEEN CONSIDERED AT EACH STATION.
2	Supply, Erection and Commissioining of 245KV CVT alongwith support structure	NO	4	235011	940044.00	2 NOS CVT AT EACH STATION FOR PHASE TO PHASE COUPLING.
3	Supply , Erection and Commissioning of Wave Trap support structure and BPL	NO	4	238626	954504.00	2 NOS WAVE TRAP AT EACH STATION FOR PHASE TO PHASE COUPLING.
4	Supply and Erection of Coupling Device	No.	4	92241	368964.00	2 NOS AT EACH STATION
5	Supply and Laying of HF Cable	KM	3	135517	406551.00	1km length at PG end and 2km at OPTCL end.
6	Supply, Laying and termination of CABLE (14CX2.5Sqmm) between relay panel to PLCC	KM	1	336345	336345.00	0.5 km length at PG end and 0.5km at OPTCL end.
7	Clamps and Connector for Wave Trap & CVT	SET	8	18750	150000.00	
8	Jumper Conductor	NO	8	18750	150000.00	
9	Deputation of Relay Engineer	Days	8	50000	400000.00	4 Days at PG end and 4Days at OPTCL end.
10	Deputation of PLCC Engineer	Days	10	50000	500000.00	5 Days at PG end and 5 Days at OPTCL end.
11	Miscellaneous	LS		300000	300000.00	
	Total (G) :				5918394.00	

Annexure- B.17

Third Party Protection Schedule

Group-I			
Date of Audit	Substations	Lodging and Boarding	Transport
July, 15 (Completed)	Subhasgram (PG) & Jeerat (WBSETCL)		
Sept, 2015 (Completed)	Bidhannagar (WBSETCL) & Durgapur (PG)	Stay at DVC guest house	Transportation will be arranged by Powergrid
Sept, 2015 (Completed)	DSTPS(DVC) & Mejia (DVC)		
Aug, 2015 (Completed)	Kolaghat (WBPDCL) & Kharagpur (WBSETCL)	Stay at Kolaghat Guest House, if required	Transportation arrangement will be done by Powergrid
October, 2015	Mendhasal (OPTCL)	Stay at Talcher, NTPC guest house	Transportation from Kolkata to Bhubaneswar & back will be arranged individual by organizations and rest of the transportations arrangement will be done by Powergrid
October, 2015	Talcher STPS (NTPC)		
October, 2015	Angul, GMR & JITPL		
November/ December, 2015	Bakreswar (WBPDCL) & Sagardighi (WBPDCL)	Stay at Sagardighi Guest House	Transportation will be arranged by Powergrid
November/ December, 2015	Farakka (NTPC) & Malda (PG) Behrampur(PG)	Stay at NTPC, Farakka Guest House	Transportation will be arranged by Powergrid
Team member	One representative from ERPC One representative from ERLDC One representative from PGCIL One representative from auditee utilities		

Annexure- B.29

Latest status on non-availability of SCADA data

It was informed by ERLDC that some constituents are not updating single line diagram in SCADA as per actual real time network and same is causing lack of network visibility.

All constituents agreed to update SCADA single line diagram as per real network time to time and will furnished the same to ERLDC also.

The status as updated in the SCADA meeting is as given below:

i) List of additional elements/feeders whose data is not available – station under ULDC project:

SL no	Name of Utility	KV	Name of station	Reason for non reporting	Latest status
1	OPTCL	220	Vedanta (9x135 MW)	No status points are available.	No isolators status are available. MW/ MVAR not available for sterlite 1/2 line, station transformer / Smelter. CBs of Bus coupler not available. Bus-1 KV/ HZ not available. **Problem still not resolved**

ii) The List of RTU supplied under BSEB ULDC Project but data is faulty/ intermittent:

S/n	Name of RTU locations	Latest status	Remarks
1	Jakkanpur, Khagaul RTU, Dumraon, Karmnasha, Sitamarhi, , Purnea & Koshi	Data is reporting intermittently.	1) Data integrated through GPRS will be intermittent till Final communication packages is implemented (Already awarded to PGCIL for execution). 2) ALL RTU will be report to SLDC patna subject to availability of communication system (Already Awarded to PGCIL) 3) New RTU is being integrated with OSI systems and this RTU will report to ERLDC once ERLDC OSI system is ready. **Problem still not resolved**
2	Hathidah, Lakhisarai & Darbhanga	Data is reporting intermittently.. Due to re-conductoring work in Darbhanga-Samastipur T/L, Darbhanga is not reporting temporarily.	
3	BTPS	RTU dismantled. Renovation/overhauling work is going on. SAS is expected to be operational by the November, 2014.	
4	220 kV Hajipur	*Hajipur is temporarily down, BSPTCL working to restore it.*	
5	Jagdishpur, Sipara, Madhepura	RTU has been supplied by PGCIL under Sub-transmission project of Bihar but commissioning is left out. Now, it will be done in ULDC upgradation scheme.	
6	Siwan, Valmikinagar, Gopalganj, Kisanganj and Arrah	RTU along with communication has been included in the scope of work of Powergrid under up gradation/ replacement scheme of ULDC. It was scheduled to be completed by Oct'14. *RTU supplied by M/s. Chemtrols except Darbhanga. RTU reached site.*	

iii) The updated status of telemetry of JSEB Sub-Stations under ULDC project is as given below:

Sl. No.	Name of the RTU location	Latest status	Remarks
1	Ramchandrapur	Reporting is interrupted because of problem in PLCC link between Candil & Ramchandrapur. CVT brusted at Ramchandrapur bay and requires replacement. Arrangement in being done for its replacement.	1) RTU's CPU Card sent to Bhubaneswar for repairing . 2) All RTU will restored by Mid March 2015. **Problem still not resolved. None of real time data available since 15/06/15.**
2	Jamtara	Jamtara RTU has been shifted in new control room. POWER GRID has been requested to reintegrate the feeders in RTU as integration of additional feeder (new element) in the existing RTU. *Powergrid informed that Advance Payment towards new element integration is pending since long. After payment, M/s. ALSTOM will give the schedule of site visit for feeder integration.*	
3	Deoghar	Both LMU & LMDU rusted at Jamtara. Arrangement inbeing done for its replacement. Deoghar-Jamtara-Maithon link is interrupted also because of snatching of patching cable at Maithon (G) and Maithon (SLDC). This was found during survey of sites with M/s PUNCOM which will be corrected by the agency under AMC. AMC by PUNCOM has been started.	
4	Garawah	Garawah RTU will be restored when it will be connected from Ranchi end through Hatia-Loherdaga-Latehar-Daltonganj –Garwah Transmission lie.	
5	Kendposi	Reporting is interrupted because of shifting of Chandil bay at Rajkharsawan. PLCC outdoor equipment has been shifted recently to new location of Chandil bay at RKSN. Some work like termination of co-axial cable will be done soon.	
6	Goelkera		
7	Jadugoda	Co-axial cable faulty at Golmuri (Chandil bay)	

iv) The updated status of telemetry of OPTCL Sub-Stations under ULDC project is project as given below:

S/n	Name of RTU Locations	Latest status
1	Nalco	OPTCL informed that RTU is reporting but intermittent since it was not configured properly. The issue was already taken up with Nalco and it will be resolved soon. OPTCL has resolved the issue. Some Unit generation polarity will be resolved by Feb 2015. **Problem still not resolved**

v) **RTU telemetry provided but data are intermittent / new element not wired.**

SL No	Name of station/ Utility	Reason for non reporting	Latest status
I	Lalmatia JSEB	MW / MVAR/ OLTC tap of 220/132 KV ICT –II not available	MW/MVAR/OLTC tap of 220/132 KV ICT-II not available. Will be complete during additional feeder integration, no time frame. **Problem still not resolved**
II	JSPL (Meramundali - 400)	Most of the data not available .	OPTCL informed that they are taking matter with JSPL. **Problem still not resolved**
IV	DVC		
	Patherdiah,		RTU reached site. commissioned within Feb 2015. **(RTU Commissioned but not integrated with SLDC.)**
	Kalipahari		RTU reached site. **(RTU Commissioned but not integrated with SLDC.)**

vi) **Sub - Stations (220 & 132 kV) Telemetry not provided :**

SL No	Name of station/ Utility	Reason for non reporting	Latest status
I	WBSETCL		
	Krishna Nagar	RTU not provided for data telemetry	RTU integrated .
	CESC S/s: EM 220 kV		CESC control centre ICCP will be integrated with WB's new OSI system by April 2015. **WBSETCL confirmed that same will available TO OSI system by 31st July 2015.**
	CESC : Kasba-132 kV, EM-132 kV Jadavpur, Chakmir, Majerhat and CESC Belur		
II	JSEB		
	Hatia New	**RTU not provided for data telemetry**	Hatia SAS to be integrated with SLDC. No time frame. By Feb 2015 all RTUs will be supplied. No commissioning time frame. **Problem still not resolved**
	Manique (Chandil)		
	Japla		By Feb 2015 all RTUs will be supplied. No commissioning time frame. **Problem still not resolved**

Unavailability Of Critical Real Time data :

Name of station/ Utility	Not reporting since	ERLDC Remarks
SEL	24/06/15	Status and CBs, SOE point of Old switch yard not available since 01/05/15. *Restoration work is in progress.*
APNRL	1/5/2015	*Work will start soon.*
Sasaram (765)	13/05/15	*Intermittent.*
GMR	Since Generation	None of Unit side data and protection signal available- *By November, 2015*
Sagardighi (400)	28/04/15	*Restoration work is in progress.*
Nabinagar (400)	28/12/14	*Restoration work is in progress.*
Behrampur (400)		*SAS hanging*

JUSNL (JSEB): None of data is available	15/06/15	*7 out of 14 RTUs reporting to SLDC*

ANNEXURE - C.1

Approved Maintenance Schedule of Thermal Generating Units for December, 2015 as per LGBR 2015-16

System	Station	Unit	Size (MW)	period		No. of Days	Reason
				From	To		
WBPDCL	Bakreswar TPS	5	210	30.11.15	7.12.15	7	BTG - Major Overhauling
CESC	BUDGE-BUDGE	2	250	16.12.15	23.12.15	7	Statutory Hyd. Test
		3	250	24.12.15	30.12.15	7	Statutory Hyd. Test
CESC	TITAGARH	2	60	29.12.15	30.12.15	2	Statutory Insp. of Boiler & other Turbibe related job
DPL	DPPS	7	300	08.12.15	22.12.15	15	Boiler licence renewal
Additional Maintenance Schedule as requested by constituents							
NHPC	Teesta V	3	170	01.12.15	21.12.15	21	Annual Overhaul/Maintenance
	Teesta V	1	170	23.12.15	12.01.16	21	Annual Overhaul/Maintenance

Annexure- C.1

EASTERN REGIONAL LOAD DESPATCH CENTRE
KOLKATA

TRANSMISSION ELEMENTS OUTAGE APPROVED IN 115TH OCC MEETING OF ERPC

Sr. No	NAME OF THE ELEMENTS	DATE	TIME	DATE	TIME	REMARKS	S/D availed BY	Reason	SUBJECT TO CONSENT FROM AGENCY
1	400 KV Rourkela-Talcher # 1	19-11-2015	*09:00*	19-11-2015	17:00	ODB	ER-II/Odisha	For replacement of insulator strings at Location No. - 322 (Top Phase) Talcher side by Rourkela.	
2	220kV TBC Bay (bay no. (Bay no. 203) at Rengali	20-11-2015	*09:00*	20-11-2015	18:00	ODB	ER-II/Odisha	Remote operation of isolators for NTAMC work & allignment	ODISHA
3	3*80MVAR L/R OF 765KV NRNC-DHARAMJAIGARH-2 AT NRNC	20-11-2015	08:00	21-11-2015	18:00	ODB	ER-I	BALANCE WORK OF 765KV NRNC-DMG-2 PROTECTION CHECKING ,WIRING MODIFICATION TO CHARGE THE REACTOR AS A L/R.(PRESENTLY SAID REACTOR CHARGED AS A B/R)	NLDC
4	100 MVA ICT - I PRN S/S	20-11-2015	10:00	30-03-2016	14:00	OCB	ER-I	RETROFITTING OF 100 MVA ICT BY 160 MVA ICT	BIHAR
5	132KV D/C Malda-Khejuria line	21-11-2015	07:00:00	22-11-2015	17:00	ODB	ER-II/KOL	Re-conductoring work of 400KV Farakka-Malda D/c Line	BIHAR
6	400 kv Binagudi - Rangpo- Teesta -I	21-11-2015	*07:00*	21-12-2015	15:00	ODB	ULDC ER - II	OPGW STRINGING WORK	TEESTA
7	A/R Angul- Bolangir	21-11-2015	*09:00*	21-12-2015	17:00	ODB	ULDC ER - II	OPGW STRINGING WORK	
8	A/R Jeypore -Bolangir	21-11-2015	*09:00*	21-12-2015	17:00	ODB	ULDC ER - II	OPGW STRINGING WORK	
9	315 MVA ICT-I at Rourkela	23-11-2015	*09:00*	23-11-2015	17:00	ODB	ER-II/Odisha	AMP Work.	ODISHA
10	50 MVAR L/R OF 400 KV BSF - SSRM -3 AT BSF	23-11-2015	*09:00*	10-03-2015	17:00	OCB	ER-I	SWAPPING OF REACTORS OF PURNEA - I TO SSRM -3 AT BSF.	
11	400 KV BUS - I AT BSF S/S	23-11-2015	08:00	24-11-2015	18:00	ODB	ER-I	BUS SPLITTING RELATED WORK. AND 125 MVAR B/R -3 MAIN BAY JUMPERING WORKS AT BSF.	
12	315MVA ICT-I AT Maithon	23-11-2015	*09:00*	23-11-2015	18:00	ODB	ER-II/KOL	AMP Works. And 42389B-RPh isolator alignment	DVC
13	132 KV D/C [Kisanganj- Purnea(PGCIL) Ckt & Kisanganj – Dalkhola (WBSETCL) Ckt] Line of BSPTCL	23-11-2015	08:00	23-11-2015	14:00	ODB	ER-II/KOL	Stringing of LILO of 220KV D/C Siliguri-Dalkhola Line at Kisanganj for over- crossing .	BIHAR
14	220 KV BUS-1 Durgapur	23-11-2015	08:00	28-11-2015	18:00	ODB	ER-II/KOL	Dismantling , erection & commissioning of (4 NO BUS ISOLATOR) 20189A,20289A,20389A,20489A isolator under add cap. During the period 315 MVA ICT#1, 220 KV DVC#2 & 220 KV BUS SECTIONALIZER WILL	DVC
15	132 KV D/C Satgachia-Kalna T/L of WBSETCL (T.No. 68-69)	23-11-2015	06:00	23-11-2015	17:00	ODB	ER-II	Stringing of 400KV Rajarhat-Purnea Line	WEST BENGAL
16	220KV BUS-I at Durgapur	23-11-2015	06:00	28-11-2015	17:00	ODB	ER-II	For Retrofitting of Isol. Under ADDCAP	DVC
17	220KV DVC-II at Durgapur	23-11-2015	06:00	24-11-2015	17:00	OCB	ER-II	For Retrofitting of Isol. Under ADDCAP	DVC
18	220kV side ICT-I bay (Bay no. 201) at Rengali	24-11-2015	*09:00*	24-11-2015	18:00	ODB	ER-II/Odisha	Remote operation of isolators for NTAMC work & allignment	ODISHA
19	Line Reactor of Jeypore line at Bolangir	24-11-2015	*09:00*	24-11-2015	18:00	ODB	ER-II/Odisha	AMP Work and testing on CSD.	
20	50 MVAR Bus Reactor at Rourkela	24-11-2015	*09:00*	24-11-2015	17:00	ODB	ER-II/Odisha	AMP Work.	
21	TIE BAY OF 125MVAR B/R & 400KV RNC-NRNC-3 AT RNC	24-11-2015	09:30	24-11-2015	16:30	ODB	ER-I	FOR AMP WORK	
22	400KV Maithon Jamshedpur Line	24-11-2015	*09:00*	24-11-2015	14:00	ODB	ER-II/KOL	Line bay AMP	
23	1) 32KV Khejuria-Dhulian line(CKT-2)132KV Kheguria-Ambuja-Raghunathgang(CKT-2).(This is a double ckt line at the crossing area. So to take up the re-conductoring works, shut down of both ckts i.e. double ckt line is required).	24-11-2015	07:00:00	25-11-2015	17:00	ODB	ER-II/KOL	Re-conductoring work of 400KV Farakka-Malda D/c Line	BIHAR
24	400 kV bus-I at Jeypore	25-11-2015	09:30	25-11-2015	17:30	ODB	ER-II/Odisha	Final Stringing for connecting 125 MVAR Bus Reactor to 400 kV BUS-I	NLDC
25	Line Reactor of Angul line at Bolangir	25-11-2015	*09:00*	25-11-2015	18:00	ODB	ER-II/Odisha	AMP Work and testing on CSD.	
26	400 KV Rourkela-Sundargarh # 1 with Line Reactor	25-11-2015	*09:00*	25-11-2015	17:00	ODB	ER-II/Odisha	AMP Work and testing on CSD by Rourkela.	
27	400KV BUS-1 AT MUZ	25-11-2015	*09:00*	25-11-2015	17:00	ODB	ER-I	FOR FINAL JUMPER CONNECTION OF 500MVA ICT-3 BAYS AT MUZ	
28	400KV NRNC-RNC-1	25-11-2015	08:00	25-11-2015	18:00	ODB	ER-I	FOR AMP WORK	
29	400 KV BSF -SSRM -3	25-11-2015	08:00	25-11-2015	18:00	ODB	ER-I	DISMANTLING OF BUSHING AND CONSERVATOR TANK OF 80 MVAR CGL REACTOR OF 400 KV BSF - SSRM -3 AT BSF UNDER BAY SWAPPING WORK.	
30	132 KV SSRM(PG) - KUDRA	25-11-2015	07:00:00	26-11-2015	18:00	ODB	ER-I	FOR POWER LINE CROSSING WORK OF EXTENSION OF 400 KV BSF - SSRM - III AND IV AT VNS	BIHAR
31	132 kv D/C BODHGAYA - SHERGHATI LINE OF BSPTCL	25-11-2015	08:00	26-11-2015	17:00	ODB	ER-I	STRINGING WORK OF 765 KV GAYA - VARANASI T/L	BIHAR
32	TIE BAY OF 400KV RNC- NRNC-4 & FUTURE AT RNC	25-11-2015	09:30	25-11-2015	16:30	ODB	ER-I	FOR AMP WORK	
33	315MVA ICT-II AT Maithon	25-11-2015	*09:00*	25-11-2015	17:00	ODB	ER-II/KOL	Tan Delta of 220KV R-PH Bushing at variable frequency.	DVC
34	220KV D/C Siliguri -Dalkhola Line (both Ckt.s)	25-11-2015	07:00:00	26-11-2015	17:00	OCB	ER-II/KOL	Re-organization of LILO of 220KV D/C Siliguri-Dalkhola Line at Kisanganj at tapping points & charging.	Shutdown will be allowed after restoration of Farakka - Malda - I
35	220 KV DUMKA - MAITHON - I	25-11-2015	10:00	25-11-2015	17:00	ODB	ER - I	CT REPLACEMENT WORK	JHARKHAND
36	Power Line Xing: 132 KV Purnia-Katihar T/L	25-11-2015	06:00	25-11-2015	17:00	ODB	ER-II	Stringing of 400KV Rajarhat-Purnea Line	JHARKHAND
37	315MVA ICT-I at Durgapur	25-11-2015	06:00	27-11-2015	17:00	OCB	ER-II	For Retrofitting of Isol. Under ADDCAP	DVC
38	400kV Indravati Main Bay (Bay no.412) at Rengali	26-11-2015	*09:00*	26-11-2015	18:00	ODB	ER-II/Odisha	Remote operation of isolators for NTAMC work & allignment	
39	Balangir- Jeypore line Main Bay(403) at Bolangir	26-11-2015	*09:00*	26-11-2015	18:00	ODB	ER-II/Odisha	AMP Work	
40	400 KV Rourkela-Sundargarh # 2	26-11-2015	*09:00*	26-11-2015	17:00	ODB	ER-II/Odisha	AMP Work by Rourkela.	NLDC
41	765kV SNG- Angul Line-2 with L/R at Sundargarh	26-11-2015	*09:00*	27-11-2015	17:00	ODB	ER-II/Odisha	Painting of fire fighting, rectification of WT chattering by Sundargarh	NLDC
42	400 KV MAIN BAY OF SLG -I AT NPRN	26-11-2015	10:00	29-11-2015	18:00	OCB	ER-I	FOR OVERHAULING OF CGL BREAKER. NO POWER INTERUPPTION. S/D APPROVED IN 114 TH OCC BUT NOT GRANTED DUE TO BIHAR ELECTION.	
43	400KV NPRN-NSLG-1	26-11-2015	10:00	26-11-2015	11:00	ODB	ER-I	TESTING OF LINE ISOLATOR OPERATION FROM MANESAR FOR NTAMC WORK	

44	400KV NPRN-NSLG-2	26-11-2015	12:00	26-11-2015	13:00	ODB	ER-I	TESTING OF LINE ISOLATOR OPERATION FROM MANESAR FOR NTAMC WORK	
45	400KV BUS-2 AT MUZ	26-11-2015	*09:00*	26-11-2015	17:00	ODB	ER-I	FOR FINAL JUMPER CONNECTION OF 500MVA ICT-3 BAYS AT MUZ	
46	400 KV BSF - KOD. - 1	26-11-2015	10:00	26-11-2015	14:00	ODB	ER-I	BUS SPLITTING RELATED WORK AT BSF.	DVC
47	L/R OF 400KV RNC-SIPAT-1 AT RNC	26-11-2015	09:30	26-11-2015	16:30	ODB	ER-I	AMP WORK (LINE WILL BE U/S/D FOR 10 MINUTES EACH TIME FOR ITS ISOLATION AND FOR TAKING INTO SERVICE)	
48	125 MVAR B/R - I AT PATNA	26-11-2015	09:30	28-11-2015	17:30	ODB	ER-I	ERECTION OF TIE BAY ASSOCIATED WITH 125 MVAR B/R - I & 63 MVAR KISHANGANG L/R -2 BAY AT PATNA	
49	220 KV DUMKA - MAITHON - II	26-11-2015	10:00	26-11-2015	17:00	ODB	ER - I	CT REPLACEMENT WORK	JHARKHAND
50	400KV BARIPADA MAIN BAY at Keonjhar	27-11-2015	08:00	27-11-2015	17:00	ODB	ER-II/Odisha	AMP ACTIVITY	
51	Balangir-Angul line Main Bay(401) at Bolangir	27-11-2015	*09:00*	27-11-2015	18:00	ODB	ER-II/Odisha	AMP Work	
52	400 KV Rourkela-Ranchi # 1	27-11-2015	*09:00*	27-11-2015	17:00	ODB	ER-II/Odisha	AMP Work by Rourkela.	
53	400 KV SEL-Raigarh # 2	27-11-2015	*09:00*	27-11-2015	17:00	ODB	ER-II/Odisha	For tightening of jumpers, adjustment of VD and corona ring by Rourkela.	NLDC
54	220KV BUS-1&2 AT MUZ	27-11-2015	*09:00*	27-11-2015	17:00	ODB	ER-I	FOR FINAL JUMPER CONNECTION OF 500MVA ICT-3 BAYS AT MUZ	BIHAR
55	400KV EAST FILTER BUS AT SSRM	27-11-2015	*09:00*	27-11-2015	17:00	ODB	ER-I	FOR TRANSPORTATION OF NEW 500 MVA ICT -1 FOR REPLACEMENT OF EXISTING 315 MVA ICT - I AT PSL UNDER TR -01 PACKAGE. NO INTER REGIONAL POWER FLOW DURING THE SAID S/D. HVDC MODE AND AC BYPASS MODE REQUIRED TO BE MADE S.OFF.	
56	400 KV BSF - KOD. - 2	27-11-2015	10:00	27-11-2015	14:00	ODB	ER-I	BUS SPLITTING RELATED WORK AT BSF.	DVC
57	MAIN BAY OF 125MVAR B/R AT RNC	27-11-2015	09:30	27-11-2015	16:30	ODB	ER-I	FOR AMP WORK	
58	TIE BAY OF 315MVA ICT-2 & 400KV CHAIBASA-RKL-1 AT CHAIBASA	27-11-2015	*09:00*	30-11-2015	17:00	ODB	ER-I	FOR CSD INSTALLATION WORK	
59	315 MVA ICT - AT JSR	27-11-2015	09:30	27-11-2015	17:30	ODB	ER-I	TAN DELTA TAP POSITION REPLACEMENT IN 02 NO. 400 KV BUSHING	JHARKHAND
60	400 KV SARANATH - ALLAHBAD	27-11-2015	09:00	29-11-2015	17:00	ODB	ER - I	FOR RECTIFICATION OF INSULATORS STRING AT VARIOUS LOC. AS DAMGED BY MISCREANTS.	NLDC
61	400KV Farakka-Malda-2	27-11-2015	06:00	30-01-2015	17:00	ODB	ER-II	Re-Conductoring of 400KV MLD-FKK-2 line	THE SHUTDOWN IS APRROVED TILL 30/11/15. LINE NEED TO BE CHARGED FIRST AND FURTHER APPROVAL WILL BE ISSUED AS PER DECISSION OF THE FORUM.
62	400KV NPRN-NSLG-3	28-11-2015	14:00	28-11-2015	15:00	ODB	ER-I	TESTING OF LINE ISOLATOR OPERATION FROM MANESAR FOR NTAMC WORK	
63	400KV NPRN-NSLG-4	28-11-2015	16:00	28-11-2015	17:00	ODB	ER-I	TESTING OF LINE ISOLATOR OPERATION FROM MANESAR FOR NTAMC WORK	
64	400KV BARIPADA-BR TIE BAY at Keonjhar	28-11-2015	08:00	28-11-2015	17:00	ODB	ER-II/Odisha	AMP ACTIVITY	
65	220 KV Bus Coupler at Rourkela	28-11-2015	*09:00*	28-11-2015	17:00	ODB	ER-II/Odisha	AMP Work.	ODISHA
66	400KV NPRN-MLD-1	28-11-2015	10:00	28-11-2015	11:00	ODB	ER-I	TESTING OF LINE ISOLATOR OPERATION FROM MANESAR FOR NTAMC WORK	
67	400KV NPRN-MLD-2	28-11-2015	12:00	28-11-2015	13:00	ODB	ER-I	TESTING OF LINE ISOLATOR OPERATION FROM MANESAR FOR NTAMC WORK	
68	220KV BUS-2 AT MUZ	28-11-2015	*09:00*	28-11-2015	17:00	ODB	ER-I	FOR FINAL JUMPER CONNECTION OF 500MVA ICT-3 BAYS AT MUZ	BIHAR
69	80 MVAR L/R OF 400 KV BSF -PRN -1 AT BSF	28-11-2015	08:00	15-03-2016	18:00	ODB	ER-I	SWAPPING OF REACTORS OF PURNEA - I TO SSRM -3 AT BSF.	
70	400 KV RNC - MTN RB - I	28-11-2015	10:00	28-11-2015	15:00	ODB	ER-I	LINE MAINTENANCE WORK RNC T/L TEAM	MPL
71	400KV MTN-KHG-II Line with LR	28-11-2015	*09:00*	28-11-2015	14:00	ODB	ER-II/KOL	CSD re commissioning	
72	400 KV JAMSHEDPUR - MEJIA -3 & Mejia - Maithon - III	29-11-2015	06:30:00	30-11-2015	15:30	ODB	WBSETCL	CROSSING OF 132 KV GOBANG - SANTURI LINE	DVC
73	400 KV SSRM - NABINAGAR D/C	29-11-2015	07:00:00	30-11-2015	18:00	ODB	ER-I	FOR POWERLINE CROSSING WORK OF EXTENSION OF 400 KV BSF - SSRM - III AND IV AT VNS	
74	132 KV SASARAM - KUDRA RLY (PART OF 132 KV DEHRI - KARAMNASA T/L OF BSPTCL)	29-11-2015	08:00	30-11-2015	17:00	ODB	ER-I	STRINGING WORK OF 765 KV GAYA - VARANASI T/L	BIHAR
75	400 KV S/C Berhampore-Jeerat T/L - I of PGCIL (T.No. 544-545)	29-11-2015	06:00	29-11-2015	17:00	ODB	ER-II	Stringing of 400KV Rajarhat-Purnea Line	WEST BENGAL
76	400KV BUS REACTOR MAIN BAY at Keonjhar	30-11-2015	08:00	30-11-2015	17:00	ODB	ER-II/Odisha	AMP ACTIVITY	
77	400kV Indravati Tie Bay (Bay no.411) at Rengali	30-11-2015	*09:00*	30-11-2015	18:00	ODB	ER-II/Odisha	Remote operation of isolators for NTAMC work & allignment	
78	400 KV Rourkela-Chaibasa # 1	30-11-2015	*09:00*	30-11-2015	17:00	ODB	ER-II/Odisha	Retrofitting of REL 670 relay in Main-I Distance Protection in place of SEL 321 relay by Rourkela.	
79	400 KV MAIN BAY OF SLG -2 AT NPRN	30-11-2015	10:00	03-12-2015	18:00	OCB	ER-I	FOR OVERHAULING OF CGL BREAKER. NO POWER INTERUPPTION. S/D APPROVED IN 114 TH OCC BUT NOT GRANTED DUE TO BIHAR ELECTION.	
80	400KV NPRN-MUZ-1	30-11-2015	14:00	30-11-2015	15:00	ODB	ER-I	TESTING OF LINE ISOLATOR OPERATION FROM MANESAR FOR NTAMC WORK	NLDC
81	400KV NPRN-MUZ-2	30-11-2015	16:00	30-11-2015	17:00	ODB	ER-I	TESTING OF LINE ISOLATOR OPERATION FROM MANESAR FOR NTAMC WORK	NLDC
82	63 MVAR KISHANGANG L/R -2 AT PATNA	30-11-2015	09:30	02-12-2015	17:30	ODB	ER-I	ERECTION OF TIE BAY ASSOCIATED WITH 125 MVAR B/R - I & 63 MVAR KISHANGANG L/R -2 BAY AT PATNA	
83	400KV MTN-KHG-I Line with LR	30-11-2015	*09:00*	30-11-2015	14:00	ODB	ER-II/KOL	CSD re commissioning and Line CT amp	
84	315 MVA ICT#1 DURGAPUR	30-11-2015	08:00	01-12-2015	18:00	OCB	ER-II/KOL	Dismantling , erection & commissioning of 20189B, 20189T isolator under add cap	DVC
85	400 KV SASARAM - ALLAHBAD	30-11-2015	09:00	03-12-2015	17:00	ODB	ER - I	FOR RECTIFICATION OF INSULATORS STRING AT VARIOUS LOC. AS DAMGED BY MISCREANTS.	NLDC
86	400KV ICT-2 MAIN BAY at Keonjhar	01-12-2015	08:00	01-12-2015	17:00	ODB	ER-II/Odisha	AMP ACTIVITY	
87	400 KV Rourkela-Sundargah # 1	01-12-2015	*09:00*	01-12-2015	18:00	ODB	ER-II/Odisha	Retrofitting of new MICOM P442 relay in Main-I Distance Protection in place of old version MICOM relay by Rourkela.	

88	765kV Main Bus-1 at Sundargarh	01-12-2015	*09:00*	02-12-2015	17:00	OCB	ER-II/Odisha	Fixing of 35 no greating ring.	NLDC
89	Indravati Main Bay (410) at Jeypore	01-12-2015	*09:00*	04-12-2015	17:30	OCB	ER-II/Odisha	For PIR removal works	
90	A/R scheme of 400 kv Jeypore-Bolangir line at both the end s is to be put in NON-AUTO mode	01-12-2015	09:30	31-12-2015	17:30	ODB	ER-II/Odisha	For OPGW stringing works and removing earth condutor by Jeypore	NLDC
91	400KV NPRN-BSF-1	01-12-2015	14:00	01-12-2015	15:00	ODB	ER-I	TESTING OF LINE ISOLATOR OPERATION FROM MANESAR FOR NTAMC WORK	
92	400KV NPRN-BSF-2	01-12-2015	16:00	01-12-2015	17:00	ODB	ER-I	TESTING OF LINE ISOLATOR OPERATION FROM MANESAR FOR NTAMC WORK	
93	765KV BUS-2 AT NRNC	01-12-2015	08:00	01-12-2015	18:00	ODB	ER-I	AMP WORK	NLDC
94	200MVA ICT-1 AT BANKA	01-12-2015	11:00	01-12-2015	17:00	ODB	ER-I	FOR AMP WORK	BIHAR
95	400KV NORTH BUS-1 AT SSRM	01-12-2015	*09:00*	01-12-2015	17:00	ODB	ER-I	FOR AMP WORK.	NLDC
96	400 KV BSF - PURNEA - I & II	01-12-2015	*09:00*	12-12-2015	17:00	OCB	ER-I	T/L CONSTRUCTION WORK FOR SWAPPING OF BAYS. DISMANTLING OF BUSHING AND CONSERVATOR TANK OF 80 MVAR CGL REACTOR OF 400 KV BSF - PURNEA -1 ON 01.12.15	WILL BE ALLOWED AFTER RESTORATION OF FARAKKA - MALDA/ NLDC
97	FSC OF RNC - SIPAT -I AT RNC	01-12-2015	09:30	01-12-2015	16:30	ODB	ER-I	AMP WORK	
98	765 KV ICT - I AT GAYA	01-12-2015	10:00	02-12-2015	17:00	ODB	ER-I	FOR BAY EXTENSION WORK OF 765KV GAYA-VARANASI	NLDC
99	A/R OF 400KV KHLG - BARH - II	01-12-2015	07:00:00	31-12-2015	18:00	ODB	ER-I	FOR OPGW ERECTION WORK	OUT OF KHG-BARH-II/KHG-MTN-II/BSF-MZF-I ONE A/R SHUTDOWN WILL BE ALLOWED.
100	A/R OF 400 KV KHLG - MTN - II	01-12-2015	07:00:00	31-12-2015	18:00	ODB	ER-I	FOR OPGW ERECTION WORK	OUT OF KHG-BARH-II/KHG-MTN-II/BSF-MZF-I ONE A/R SHUTDOWN WILL BE ALLOWED.
101	A/R OF 400 KV BSF - MUZ-1	01-12-2015	07:00:00	31-12-2015	18:00	ODB	ER-I	FOR OPGW ERECTION WORK UNDER HVDC SCHEME	OUT OF KHG-BARH-II/KHG-MTN-II/BSF-MZF-I ONE A/R SHUTDOWN WILL BE ALLOWED.
102	MAIN BAY OF 315MVA ICT-1 AT CHAIBASA	01-12-2015	*09:00*	05-12-2015	17:00	ODB	ER-I	FOR CSD INSTALLATION WORK	
103	400 KV JSR - TATA LINE	01-12-2015	09:30	01-12-2015	17:30	ODB	ER-I	AMP (MAIN & LINE BAY)	DVC
104	400KV Maithon Mejia-II Line	01-12-2015	*09:00*	01-12-2015	14:00	ODB	ER-II/KOL	Line CT AMP Test	DVC
105	400KV RANGPO- NSLG, CKT-1	01-12-2015	10:00	01-12-2015	17:00	ODB	ER-II/KOL	AMP of line bay	
106	220 BUS-1 at Siliguri	01-12-2015	09:00	01-12-2015	17:00	ODB	ER-II/KOL	REMOVING OF ICT-1 BUS JUMPER FOR REPLACEMENT OF M1 ISOLATOR	
107	220 KV ICT-1 MAIN BAY at Siliguri	01-12-2015	09:00	07-12-2015	17:00	OCB	ER-II/KOL	REPLACEMENT OF M1 ISOLATOR	
108	315 MVA ICT - 1 AT TALCHER	01-12-2015	*09:00*	19-12-2015	17:00	OCB	NTPC	ANNUAL MAINTENANCE WORK	
109	400KVRENGALI MAIN BAY at Keonjhar	02-12-2015	08:00	02-12-2015	17:00	ODB	ER-II/Odisha	AMP ACTIVITY	
110	220kV Bus Coupler Bay (Bay no. 204) at Rengali	02-12-2015	*09:00*	02-12-2015	18:00	ODB	ER-II/Odisha	Remote operation of isolators for NTAMC work & allignment	ODISHA
111	200MVA ICT-2 AT BANKA	02-12-2015	11:00	02-12-2015	17:00	ODB	ER-I	FOR AMP WORK	BIHAR
112	400KV NORTH BUS-2 AT SSRM	02-12-2015	*09:00*	02-12-2015	17:00	ODB	ER-I	FOR AMP WORK.	NLDC
113	L/R OF 400KV RNC-SIPAT-2 AT RNC	02-12-2015	09:30	02-12-2015	16:30	ODB	ER-I	AMP WORK (LINE WILL BE U/S/D FOR 10 MINUTES EACH TIME FOR ITS ISOLATION AND FOR TAKING INTO SERVICE)	NLDC
114	400KV Maithon Gaya-I line	02-12-2015	*09:00*	02-12-2015	18:00	ODB	ER-II/KOL	Removal of pipe bus required for commencing the retrofitting of 41752 BHEL CB with Alstom CB	
115	400KV RANGPO- NSLG, CKT-2	02-12-2015	10:00	02-12-2015	17:00	ODB	ER-II/KOL	AMP of line bay	
116	400 KV TALCHER - RENGALI-I	02-12-2015	*09:00*	04-12-2015	17:00	OCB	NTPC	ANNUAL MAINTENANCE WORK	
117	400KV RENGALI- ICT-1 MAIN BAY at Keonjhar	03-12-2015	08:00	03-12-2015	17:00	ODB	ER-II/Odisha	AMP ACTIVITY	
118	765kV 240MVAR Angul Line-2 Reactor at Sundargarh	03-12-2015	*09:00*	03-12-2015	15:00	ODB	ER-II/Odisha	Reactor AMP WORK	NLDC
119	400 KV BOLANGIR BAY (403) at Angul	03-12-2015	*09:00*	03-12-2015	15:00	ODB	ER-II/Odisha	AMP works	
120	400 KV Ind Bharat - Raigarh Ckt.	03-12-2015	*09:00*	03-12-2015	17:00	ODB	ER-II/Odisha	Insulator replacement work at location no.- 637, Bottom phase Raigarh side by Rourkela.	NLDC
121	400 KV Rourkela-Raigarh # 2	03-12-2015	*09:00*	03-12-2015	18:00	ODB	ER-II/Odisha	Retrofitting of new MICOM P442 relay in Main-I Distance Protection in place of old version MICOM relay by Rourkela.	NLDC
122	765kV S/C Angul-Jharsuguda Line-2	03-12-2015	08:00	10-12-2015	18:00	ODB	ER-II/Odisha	Bird Guard fixing on suspension towers by Angul *It may please be noted that the subject items are the extra items to the contract added later on.*	NLDC
123	400KV EAST BUS-2 AT SSRM	03-12-2015	*09:00*	03-12-2015	17:00	ODB	ER-I	FOR AMP WORK.	
124	765 KV ICT - I AT GAYA	03-12-2015	10:00	04-12-2015	17:00	ODB	ER-I	FOR BAY EXTENSION WORK OF 765KV GAYA-VARANASI	NLDC
125	MAIN BAY OF ICT - II AT MUZ	03-12-2015	10:00	03-12-2015	16:00	ODB	ER-I	FOR AMP WORK	
126	MAIN BAY OF 400 KV BSF - BANKA - I AT BANAK	03-12-2015	11:00	03-12-2015	15:00	ODB	ER-I	FOR AMP WORK	
127	50 MVAR B/R -1 AT JSR	03-12-2015	09:30	03-12-2015	17:30	ODB	ER-I	AMP (MAIN & REACTOR BAY)	
128	315 MVA ICT - 1 AT PATNA	03-12-2015	09:30	03-12-2015	17:30	ODB	ER-I	AMP WORKS	BIHAR
129	400KV RANGPO- TEESTA-V, CKT-1	03-12-2015	10:00	03-12-2015	17:00	ODB	ER-II/KOL	AMP of line bay	TEESTA
130	400 KV BAY NO.401(Sagardighi main bay) at subhasgram	03-12-2015	*09:00*	03-12-2015	17:00	ODB	ER-II/KOL	AMP WORK	
131	400/220/33 KV , 315 MVA Tr-1 OF 400 KV JEERAT S/S	03-12-2015	07:00	03-12-2015	15:00	ODB	WBSETCL	MAINTENANCE WORK	
132	400 KV MAIN BUS#1 OF SGTPP	03-12-2015	08:00	03-12-2015	17:00	ODB	WBSETCL	MAINTENANCE WORK	
133	315 MVA, 400/220/33 KV IBT#1 OF KTPS	03-12-2015	06:00	03-12-2015	15:00	ODB	WBSETCL	MAINTENANCE WORK	
134	765/400kV 1500MVA ICT#1 at Sundargarh	04-12-2015	*09:00*	04-12-2015	15:00	ODB	ER-II/Odisha	ICT AMP WORK	NLDC
135	400 KV ICT-I - BOLANGIR TIE BAY (402) at Angul	04-12-2015	*09:00*	04-12-2015	15:00	ODB	ER-II/Odisha	AMP works	NLDC
136	765/400vV 1500MVA ICT#1 at Sundargarh	04-12-2015	*09:00*	05-12-2015	17:00	ODB	ER-II/Odisha	Attending punch point and Painting of fire fighting ring.	NLDC
137	400 KV MAIN BAY OF 500 MVA ICT - I AT NPRN	04-12-2015	10:00	07-12-2015	18:00	OCB	ER-I	FOR OVERHAULING OF CGL BREAKER. NO POWER INTERUPPTION. S/D APPROVED IN 114 TH OCC BUT NOT GRANTED DUE TO BIHAR ELECTION.	
138	220KV BUS-1 AT SSRM	04-12-2015	*09:00*	04-12-2015	17:00	ODB	ER-I	FOR AMP WORK.	BIHAR
139	765 KV BUS - I AT GAYA	04-12-2015	10:00	04-12-2015	13:00	ODB	ER-I	FOR BAY EXTENSION WORK OF 765KV GAYA-VARANASI	NLDC
140	400 KV BSF - SSRM - I AND II	04-12-2015	07:00:00	05-12-2015	18:00	ODB	ER-I	FOR POWERLINE CROSSING WORK OF EXTENSION OF 400 KV BSF - SSRM - III AND IV AT VNS	NLDC
141	TIE BAY OF ICT - II AT MUZ	04-12-2015	10:00	04-12-2015	16:00	ODB	ER-I	FOR AMP WORK	

142	TIE BAY OF 400 KV BSF - BANKA - I AND ICT - I AT BANAK	04-12-2015	11:00	04-12-2015	15:00	ODB	ER-I	FOR AMP WORK	
143	315 MVA ICT - 2 AT PATNA	04-12-2015	09:30	04-12-2015	17:30	ODB	ER-I	AMP WORKS	BIHAR
144	400KV Maithon Gaya-II line	04-12-2015	*09:00*	04-12-2015	18:00	ODB	ER-II/KOL	AMP works	
145	400KV RANGPO- TEESTA-V, CKT-2	04-12-2015	10:00	04-12-2015	17:00	ODB	ER-II/KOL	AMP of line bay	TEESTA
146	220kV SILIGURI- Binaguri - II	04-12-2015	09:00	04-12-2015	17:00	ODB	ER-II/KOL	AMP	
147	400 KV D/C NSLG-NPRN Ckt. III & IV (POWERLINK)	05-12-2015	07:00:00	20-12-2015	17:00	OCB	ER-II/KOL	Erection of towers & stringing of both Ckt. LILO of NSLG-NPRN (Ckt. III & IV) at Kisanganj S/s.	DVC
148	400 KV ICT-I BAY at Angul	05-12-2015	*09:00*	05-12-2015	15:00	ODB	ER-II/Odisha	AMP works	NLDC
149	ICT-I TIE BAY (408) at Jeypore	05-12-2015	*09:00*	08-12-2015	17:30	OCB	ER-II/Odisha	For PIR removal works	
150	63MVAR L/R OF 400KV NPRN-NSLG-1	05-12-2015	10:00	20-12-2015	18:00	OCB	ER-I	OVERHAULING OF REACTOR. LINE WILL BE U/S/D FOR 10 MINUTES EACH TIME FOR ITS ISOLATION AND FOR TAKING INTO SERVICE.	
151	220KV BUS-2 AT SSRM	05-12-2015	*09:00*	05-12-2015	17:00	OCB	ER-I	FOR AMP WORK.	BIHAR
152	400 KV BAY NO.403(ICT-I main bay) at subhasgram	05-12-2015	*09:00*	05-12-2015	17:00	ODB	ER-II/KOL	AMP WORK	
153	63 MVAR L/R OF 400 KV NPRN - NSLG - I AT NPRN	05-12-2015	10:00	20-12-2015	18:00	OCB	ER-I	OVERHAULING OF MENTIONED L/R (LINE WILL BE OUT FOR 10 MIN EACH TIME FOR ISOLATING THE SAID L/R AND FOR TAKING IT INTO SERVICE).	WILL BE ALLOWED DEPENDING UPON THE VOLTAGE AT PURNEA
154	400/220/33 KV , 315 MVA Tr-2 OF 400 KV JEERAT S/S	05-12-2015	07:00	05-12-2015	15:00	ODB	WBSETCL	MAINTENANCE WORK	
155	220kV BUS COUPLER	06-12-2015	09:00	06-12-2015	17:00	ODB	ER-II/KOL	AMP	
156	400 KV MAIN BUS#2 OF SGTPP	06-12-2015	08:00	06-12-2015	17:00	ODB	WBSETCL	MAINTENANCE WORK	
157	400 KV S/C Subhasgram-Sagardighi T/L-II of PGCIL (T.No. 544-545)	06-12-2015	06:00	06-12-2015	17:00	ODB	ER-II	Stringing of 400KV Rajarhat-Purnea Line	WEST BENGAL
158	400KV BUS -1 at Keonjhar	07-12-2015	08:00	07-12-2015	17:00	ODB	ER-II/Odisha	AMP ACTIVITY	
159	765 KV SUNDERGARH-II BAY at Angul	07-12-2015	*09:00*	07-12-2015	17:00	ODB	ER-II/Odisha	AMP works	NLDC
160	400 KV Indravati-rengali line	07-12-2015	08:00	07-12-2015	18:00	ODB	ER-II/Odisha	Dismantling of bushing & turret 0f 50 MVAR Rengali L/R in Overhauling by Indravati.	NLDC
161	765/400kV 1500MVA ICT#2 at Sundargarh	07-12-2015	*09:00*	08-12-2015	17:00	ODB	ER-II/Odisha	Attending punch point and Painting of fire fighting ring.	NLDC
162	400 KV Rourkela-Chaibasa # 1	07-12-2015	*09:00*	08-12-2015	18:00	ODB	ER-II/Odisha	Removal of PIR in Main Bay CB (41652). The S/D of the line required due to clearance issue by Rourkela.	
163	50 MVAR Line Reactor of Rengali line at Indravati	07-12-2015	08:00	16-12-2015	18:00	OCB	ER-II/Odisha	Overhauling works of 50MVAR L/R at Indravati	
164	TIE BAY OF 400 KV MUZ - PRN II AND MUZ - GKP - II AT MUZ	07-12-2015	10:00	07-12-2015	16:00	ODB	ER-I	FOR AMP WORK	
165	MAIN BAY OF 400 KV ICT - I AT BANAK	07-12-2015	11:00	07-12-2015	15:00	ODB	ER-I	FOR AMP WORK	
166	TIE BAY OF 315MVA ICT-1 & 400KV JSR-CHAIBASA-1 AT CHAIBASA	07-12-2015	*09:00*	12-12-2015	17:00	ODB	ER-I	FOR CSD INSTALLATION WORK	
167	50 MVAR B/R -2 AT JSR	07-12-2015	09:30	07-12-2015	17:30	ODB	ER-I	AMP (MAIN & REACTOR BAY)	
168	220 KV BUS -1 AT PATNA	07-12-2015	09:30	08-12-2015	17:30	ODB	ER-I	AMP WORKS	BIHAR
169	400KV Maithon Mejia-III Line	07-12-2015	*09:00*	07-12-2015	14:00	ODB	ER-II/KOL	Line bay AMP	DVC
170	132KV Rangit-Kurseong TL	07-12-2015	08:30	18-12-2015	17:30	07-12-2015	ER-II/KOL	Replacement of 90KN Disc Insulators string detected during PID and AMC of 132KV Rangit-Kurseong TL	BIHAR
171	400 KV BAY NO.405(Tie bay of ICT-II and Jeerat) at subhasg	07-12-2015	*09:00*	07-12-2015	17:00	ODB	ER-II/KOL	AMP WORK	
172	400kV Jeypore - Indravati Line	07-12-2015	08:00:00	10-12-2015	17:00:00	ODB	ER-II	For Insulator replacement in River crossing, NH/SH crossing, Raiway crossing etc.	NLDC/ SUBJECT TO APPROVAL OF OTHER RPC IN NEXT OCC
173	400KV BUS -2 at Keonjhar	08-12-2015	08:00	08-12-2015	17:00	ODB	ER-II/Odisha	AMP ACTIVITY	
174	765KV SNG-DHARANJAYGARH LINE-1	08-12-2015	*09:00*	08-12-2015	15:00	ODB	ER-II/Odisha	Line AMP WORK at Sundargarh	NLDC
175	765 KV SUNDERGARH-II - ICT-I BAY at Angul	08-12-2015	*09:00*	08-12-2015	17:00	ODB	ER-II/Odisha	AMP works	NLDC
176	400 KV Indravati-rengali line	08-12-2015	08:00	08-12-2015	18:00	ODB	ER-II/Odisha	Fitting of turret & bushing after replacement of gaskets of 50 MVAR L/R of Rengali Line by Indravati.	NLDC
177	400 KV BUS - I AT RNC	08-12-2015	09:30	08-12-2015	16:30	ODB	ER-I	AMP WORK	
178	MAIN BAY OF MUZ - GKP - II AT MUZ	08-12-2015	10:00	08-12-2015	16:00	ODB	ER-I	FOR AMP WORK	
179	MAIN BAY OF 400 KV BSF - BANKA - II AT BANAK	08-12-2015	11:00	08-12-2015	15:00	ODB	ER-I	FOR AMP WORK	
180	132 KV RANGPO-CHUZACHEN	08-12-2015	10:00	08-12-2015	17:00	ODB	ER-II/KOL	AMP of line bay	CHUZACHEN
181	220kV Binaguri - BIRPARA-II	08-12-2015	09:00	08-12-2015	17:00	ODB	ER-II/KOL	AMP	
182	400 KV TALCHER - RENGALI-II	08-12-2015	*09:00*	10-12-2015	17:00	OCB	NTPC	ANNUAL MAINTENANCE WORK	
183	400 KV KAHALGAON - MAITHON - II	08-12-2015	*09:00*	08-12-2015	17:30	ODB	NTPC	PM & RELAY TESTING	
184	400 KV SIDE BAY OF ICT#1 OF SGTPP	08-12-2015	08:00	08-12-2015	17:00	ODB	WBSETCL	MAINTENANCE WORK	
185	400KV ICT-1 at Keonjhar	09-12-2015	08:00	09-12-2015	17:00	ODB	ER-II/Odisha	AMP ACTIVITY	
186	765KV SNG-DHARANJAYGARH LINE-2	09-12-2015	*09:00*	09-12-2015	15:00	ODB	ER-II/Odisha	Line AMP WORK at Sundargarh	NLDC
187	765 KV ICT-I BAY at Angul	09-12-2015	*09:00*	09-12-2015	17:00	ODB	ER-II/Odisha	AMP works	NLDC
188	765kV 240MVAR Bus Reactor-1 at Sundargarh	09-12-2015	*09:00*	10-12-2015	17:00	ODB	ER-II/Odisha	Attending punch point and Painting of fire fighting ring.	NLDC
189	ICT-I Main BAY(407) at Jeypore	09-12-2015	*09:00*	12-12-2015	17:30	OCB	ER-II/Odisha	For PIR removal works	
190	220 KV SIDE BAY OF 500 MVA ICT - I AT NPRN	09-12-2015	10:00	11-12-2015	18:00	OCB	ER-I	FOR OVERHAULING OF CGL BREAKER. NO POWER INTERUPPTION. BAY WILL BE CHARGED THROUGH TBC.	
191	400 KV 500MVA ICT - I AT GAYA	09-12-2015	10:00	09-12-2015	17:00	ODB	ER-I	FOR NTAMC TESTING WORK	
192	220 KV GAYA - BODHGAYA - I	09-12-2015	*09:00*	09-12-2015	18:00	ODB	ER-I	AMP WORK	BIHAR
193	220 KV SSRM -ARA - I AND 220 KV SSRM - NADOKHAR LINE OF BSPTCL	09-12-2015	07:00:00	09-12-2015	18:00	ODB	ER-I	FOR CONNECTION OF SSRM - ALLD LINE TO EASTERN BUS	BIHAR
194	133 KV RANGPO-GANGTOK-1	09-12-2015	10:00	09-12-2015	17:00	ODB	ER-II/KOL	AMP of line bay	SIKKIM
195	400 KV BAY NO.406(ICT-2 Main Bay) at subhasgram	09-12-2015	*09:00*	09-12-2015	17:00	ODB	ER-II/KOL	AMP WORK	
196	400KV BARIPADA - KEONJHAR	10-12-2015	08:00	10-12-2015	17:00	ODB	ER-II/Odisha	AMP ACTIVITY at Keonjhar	
197	400KV MAIN BUS-I at Sundargarh	10-12-2015	07:00:00	10-12-2015	19:00	ODB	ER-II/Odisha	BUS AMP WORK	
198	765 KV BUS-I at Angul	10-12-2015	*09:00*	10-12-2015	18:00	ODB	ER-II/Odisha	AMP works	NLDC
199	132KV Transfer Bus Coupler Bay AT BARIPADA	10-12-2015	*09:00*	11-12-2015	15:00	ODB	ER-II/Odisha	Annual Maintenance, No power interruption	ODISHA

200	400 KV 315MVA ICT - II AT GAYA	10-12-2015	10:00	10-12-2015	17:00	ODB	ER-I	FOR NTAMC TESTING WORK	
201	220 KV GAYA - BODHGAYA - II	10-12-2015	*09:00*	10-12-2015	18:00	ODB	ER-I	AMP WORK	BIHAR
202	TIE BAY OF 400 KV MUZ - PRN I AND MUZ - GKP - I AT MUZ	10-12-2015	10:00	10-12-2015	16:00	ODB	ER-I	FOR AMP WORK	
203	TIE BAY OF 400 KV BSF - BANKA - II AND ICT - II AT BANAK	10-12-2015	11:00	10-12-2015	15:00	ODB	ER-I	FOR AMP WORK	
204	400 KV JSR - MEJIA LINE	10-12-2015	09:30	10-12-2015	17:30	ODB	ER-I	AMP (MAIN & LINE BAY)	DVC
205	220 KV BUS -2 AT PATNA	10-12-2015	09:30	11-12-2015	17:30	ODB	ER-I	AMP WORKS	BIHAR
206	133 KV RANGPO-RANGIT	10-12-2015	10:00	10-12-2015	17:00	ODB	ER-II/KOL	AMP of line bay	
207	220KV BUS-II at Siliguri	10-12-2015	09:00	10-12-2015	17:00	ODB	ER-II/KOL	REMOVING OF ICT-2 BUS JUMPER FOR REPLACEMENT OF M2 ISOLATOR	
208	220 KV ICT-1 MAIN BAY at Siliguri	10-12-2015	09:00	17-12-2015	17:00	OCB	ER-II/KOL	REPLACEMENT OF M2 ISOLATOR	
209	400KV MAIN BUS-II at Sundargarh	11-12-2015	07:00:00	11-12-2015	19:00	ODB	ER-II/Odisha	BUS AMP WORK	
210	765 KV BUS-II at Angul	11-12-2015	*09:00*	11-12-2015	18:00	ODB	ER-II/Odisha	AMP works	NLDC
211	765kV 240MVAR Bus Reactor-2 at Sundargarh	11-12-2015	*09:00*	12-12-2015	17:00	ODB	ER-II/Odisha	Attending punch point and Painting of fire fighting ring.	NLDC
212	220 KV GAYA - DEHRI - I	11-12-2015	*09:00*	11-12-2015	18:00	ODB	ER-I	AMP WORK	BIHAR
213	220 KV BUS- I AT GAYA	11-12-2015	10:00	11-12-2015	17:00	ODB	ER-I	ISOLATOR MODIFICATION WORK	BIHAR
214	MAIN BAY OF 400 KV ICT - II AT BANKA	11-12-2015	11:00	11-12-2015	15:00	ODB	ER-I	FOR AMP WORK	
215	400 KV JSR - CHAIBASA -1	11-12-2015	09:30	11-12-2015	11:30	ODB	ER-I	CT OIL SAMPLING WORKS	
216	133 KV RANGPO-GANGTOK-1	11-12-2015	10:00	11-12-2015	17:00	ODB	ER-II/KOL	AMP of line bay	SIKKIM
217	125MVAR BUS REACTOR-I	11-12-2015	09:00	15-12-2015	17:00	OCB	ER-II/KOL	Vacuum & Dry out as per ORM July'15	
218	400kV Jeypore - Bolangir Line	11-12-2015	08:00:00	14-12-2015	17:00:00	ODB	ER-II	For Insulator replacement in River crossing, NH/SH crossing, Raiway crossing etc.	NLDC/ SUBJECT TO APPROVAL OF OTHER RPC IN NEXT OCC
219	132KV Baripada Line Bay AT BARIPADA	12-12-2015	08:00	12-12-2015	17:00	ODB	ER-II/Odisha	Annual Maintenance, No power interruption	ODISHA
220	500MVA ICT-1 AT NPRN	12-12-2015	10:00	12-12-2015	13:00	ODB	ER-I	CHECKING OF CSD WAVEFORM	
221	220 KV GAYA - DEHRI - II	12-12-2015	*09:00*	12-12-2015	18:00	ODB	ER-I	AMP WORK	BIHAR
222	400 KV SIDE ICT TIE BAY OF SGTPP	12-12-2015	08:00	12-12-2015	17:00	ODB	WBSETCL	MAINTENANCE WORK	
223	Power Line Xing: 400 KV S/C Farakka- Durgapur-II (PGCIL)	12-12-2015	06:00	12-12-2015	17:00	ODB	ER-II	Stringing of 400KV Rajarhat-Purnea Line	
224	Berhampore-Bheramara Ckt-I Main bay	13-12-2015	09:00	13-12-2015	17:00	ODB	ER-II/KOL	AMP	NLDC
225	400KV BUS-1 AT NPRN	13-12-2015	10:00	13-12-2015	18:00	ODB	ER-I	FOR AMP WORK	
226	JEERAT-BKTPP#	13-12-2015	07:00	13-12-2015	15:00	ODB	WBSETCL	MAINTENANCE WORK	
227	400 Kv Angul-Bolangir S/C Line	14-12-2015	08:00	14-12-2015	18:00	ODB	ER-II/Odisha	For replacement of porcelain insulator with long rod polymer insulator by Angul.	NLDC
228	765 KV BUS REACTOR-I at Angul	14-12-2015	*09:00*	14-12-2015	15:00	ODB	ER-II/Odisha	AMP, RCTR OUTAGE	NLDC
229	132KV Rairangpur Line Bay AT BARIPADA	14-12-2015	08:00	14-12-2015	17:00	ODB	ER-II/Odisha	Annual Maintenance, No power interruption	ODISHA
230	400 KV KHLG - LAKHISARAI -1	14-12-2015	*09:00*	14-12-2015	17:00	ODB	ER-I	T/L MAINTENANCE WORK	
231	400 KV BUS - I AT GAYA	14-12-2015	*09:00*	15-12-2015	18:00	ODB	ER-I	ISOLATOR MODIFICATION WORK	
232	MAIN BAY OF MUZ - GKP - I AT MUZ	14-12-2015	10:00	14-12-2015	16:00	ODB	ER-I	FOR AMP WORK	
233	63 MVAR KISHANGANG L/R -2 AT PATNA	14-12-2015	09:30	16-12-2015	17:30	ODB	ER-I	ERECTION AND COMMISSIONING OF 400 KV PTN -KISHANGANJ -2	
234	ICT # 1 OF SGTPP	14-12-2015	08:00	21-12-2015	15:00	ODB	WBSETCL	MAINTENANCE WORK	
235	132 KV D/C Satgachia-Jeerat T/L of WBSETCL (T.No. 365-366)	14-12-2015	06:00	14-12-2015	17:00	ODB	ER-II	Stringing of 400KV Rajarhat-Purnea Line	WEST BENGAL
236	401 Kv Angul-Bolangir S/C Line	15-12-2015	08:00	15-12-2015	18:00	ODB	ER-II/Odisha	For replacement of porcelain insulator with long rod polymer insulator by Angul.	NLDC
237	765kV DHARAMJAYGARH#1 TIE BAY(714) at Sundargarh	15-12-2015	*09:00*	15-12-2015	17:00	ODB	ER-II/Odisha	AMP WORK	NLDC
238	765 KV ICT-I at Angul	15-12-2015	*09:00*	15-12-2015	15:00	ODB	ER-II/Odisha	AMP, TRFR OUTAGE	NLDC
239	400KV Mendhasal Line 1 Main Bay AT BARIPADA	15-12-2015	*09:00*	15-12-2015	15:00	ODB	ER-II/Odisha	Annual Maintenance, No power interruption	
240	220KV BAY OF NPRN-PRN-1 AT NPRN	15-12-2015	10:00	17-12-2015	18:00	OCB	ER-I	FOR OVERHAULING OF CGL BREAKER, LINE WILL BE CHARGED THROUGH TBC	BIHAR
241	400KV EAST BUS-1 AT SSRM	15-12-2015	*09:00*	15-12-2015	17:00	ODB	ER-I	FOR AMP WORK. AS PER EXISTING SCHEME 765 KV ICT AT PUSAULU WILL ALSO BE OUT AS PER EXISTING SYSTEM AND THERE WILL BE NO POWER FLOW FROM 400 KV TO 765 KV OR VICE VERSA DURING 400 KV EAST BUS - I OUTAGE.	
242	220 KV GAYA(PGCIL) - DEHRI - I & II	15-12-2015	08:00	16-12-2015	17:00	ODB	ER-I	STRINGING WORK OF 765 KV GAYA - VARANASI T/L	
243	125MVAR B/R-3 AT BSF	15-12-2015	09:30	15-12-2015	17:30	ODB	ER-I	FOR CSD INSTALLATION,TESTING & COMMISSIONING WORK	
244	400 KV JSR - MTN LINE	15-12-2015	09:30	15-12-2015	17:30	ODB	ER-I	AMP (MAIN & LINE BAY)	
245	220KV Rangpo-New Melli, Ckt-2	15-12-2015	10:00	15-12-2015	17:00	ODB	ER-II/KOL	AMP of line bay	
246	400 KV TALCHER - ROURKELA-I	15-12-2015	*09:00*	17-12-2015	17:00	OCB	NTPC	ANNUAL MAINTENANCE WORK	
247	400 KV KAHALGAON - BARH - II	15-12-2015	*09:00*	15-12-2015	17:30	ODB	NTPC	PM & RELAY TESTING	NLDC
248	400 KV KAHALGAON - BARH - II	15-12-2015	*09:00*	16-12-2015	17:30	ODB	NTPC	PM & RELAY TESTING	NLDC
249	400kV Rourkela - Sundargarh I Line (Old Rourkela - Raigarh I Line)	15-12-2015	08:00:00	19-12-2015	17:00:00	ODB	ER-II	For Insulator replacement in River crossing, NH/SH crossing, Raiway crossing etc.	
250	Power Line Xing: 400 KV S/C Farakka- Durgapur-I (PGCIL)	15-12-2015	06:00	15-12-2015	17:00	ODB	ER-II	Stringing of 400KV Rajarhat-Purnea Line	
251	402 Kv Angul-Bolangir S/C Line	16-12-2015	08:00	16-12-2015	18:00	ODB	ER-II/Odisha	For replacement of porcelain insulator with long rod polymer insulator by Angul..	NLDC
252	765kV DHARAMJAYGARH#1 MAIN BAY(715) at Sundargarh	16-12-2015	*09:00*	16-12-2015	17:00	ODB	ER-II/Odisha	AMP WORK	NLDC
253	400 KV MERAMANDALI LINE -II	16-12-2015	*09:00*	16-12-2015	15:00	ODB	ER-II/Odisha	AMP works by Angul, LINE OUTAGE	ODISHA
254	400 KV Indravati-rengali line	16-12-2015	08:00	16-12-2015	18:00	ODB	ER-II/Odisha	Testing of 50MVAR L/R in Rengali Line before charging by Indravati.	NLDC
255	400KV TISCO Main Bay AT BARIPADA	16-12-2015	*09:00*	16-12-2015	15:00	ODB	ER-II/Odisha	Annual Maintenance, No power interruption	
256	400KV KHLG-FKK-1 & 2	16-12-2015	08:00	19-12-2015	19:00	OCB	ER-I	FOR POWERLINE CROSSING BETWEEN LOC NO 256 TO 257 OF SAID LINE BY NEW 400 KV KHLG - BANKA T/L (OLD ONE BEING SHIFTED) UNDER BUS SPLITTING SCHEME AT KHLG END).	Shutdown will be allowed after restoration of Farakka - Malda - I
257	400 KV KHLG - LAKHISARAI -2	16-12-2015	*09:00*	16-12-2015	17:00	ODB	ER-I	T/L MAINTENANCE WORK	

Annexure- C.1

258	400 KV BUS - II AT GAYA	16-12-2015	*09:00*	17-12-2015	18:00	ODB	ER-I	ISOLATOR MODIFICATION WORK	
259	220 KV RANGPO-JLHEP	16-12-2015	10:00	16-12-2015	17:00	ODB	ER-II/KOL	AMP of line bay	
260	403 Kv Angul-Bolangir S/C Line	17-12-2015	08:00	17-12-2015	18:00	ODB	ER-II/Odisha	For replacement of porcelain insulator with long rod polymer insulatorby Angul.	NLDC
261	765kV ICT#2 MAIN BAY(706) at Sundargarh	17-12-2015	*09:00*	17-12-2015	17:00	ODB	ER-II/Odisha	AMP WORK	NLDC
262	400 KV TALCHER LINE	17-12-2015	*09:00*	17-12-2015	15:00	ODB	ER-II/Odisha	AMP works by Angul, LINE OUTAGE	
263	400KV Jamshedpur Line2 Main Bay AT BARIPADA	17-12-2015	*09:00*	17-12-2015	15:00	ODB	ER-II/Odisha	Annual Maintenance, No power interruption	
264	63 MVAR KISHANGANG L/R -1 AT PATNA	17-12-2015	09:30	19-12-2015	17:30	ODB	ER-I	ERECTION AND COMMISSIONING OF 400 KV PTN -KISHANGANJ -1	
265	400KV Maithon Gaya-I line	17-12-2015	*09:00*	17-12-2015	18:00	ODB	ER-II/KOL	Fixing of earlier removed pipe bus for taking the newly installed CB into service	
266	315 MVA, 400/220/33 KV IBT#2 OF KTPS	17-12-2015	06:00	18-12-2015	15:00	ODB	WBSETCL	MAINTENANCE WORK	
267	400/220/33 KV , 315 MVA Tr-3 OF 400 KV JEERAT S/S	17-12-2015	07:00	17-12-2015	15:00	ODB	WBSETCL	MAINTENANCE WORK	
268	400 KV FARAKKA - KAHALGAON - III	17-12-2015	09:00	17-12-2015	17:30	ODB	NTPC	PM & RELAY TESTING	
269	400kV Rengali- Indravati line	18-12-2015	08:00	18-12-2015	18:00	ODB	ER-II/Odisha	If delay occurs in dryingout of 50MVAR Indravati L/R at Rengali	NLDC
270	400KV ROURKELA#2 MAIN BAY(404) at Sundargarh	18-12-2015	*09:00*	18-12-2015	15:00	ODB	ER-II/Odisha	AMP WORK	
271	Main Bay(401) of Indravati-Jeypore Line	18-12-2015	08:00	18-12-2015	18:00	ODB	ER-II/Odisha	AMP ACTIVITY by Indravati.	
272	132KV Balasore Line Main Bay AT BARIPADA	18-12-2015	*09:00*	18-12-2015	15:00	ODB	ER-II/Odisha	Annual Maintenance, No power interruption	ODISHA
273	220KV BAY OF NPRN-PRN-2 AT NPRN	18-12-2015	10:00	20-12-2015	18:00	OCB	ER-I	FOR OVERHAULING OF CGL BREAKER, LINE WILL BE CHARGED THROUGH TBC	BIHAR
274	400 KV BSF - SSRM -2	18-12-2015	*09:00*	18-12-2015	17:00	ODB	ER-I	T/L MAINTENANCE WORK	
275	Power Line Xing: 132 KV Dumka-Pakur T/L	18-12-2015	06:00	18-12-2015	17:00	ODB	ER-II	Stringing of 400KV Rajarhat-Purnea Line	JHARKHAND
276	400KV ROURKELA#2-ICT#2 TIE BAY(405) at Sundargarh	19-12-2015	*09:00*	19-12-2015	15:00	ODB	ER-II/Odisha	AMP WORK	
277	132 KV DEHRI -KUDRA LINE (MAINLY OF PGCIL)	19-12-2015	08:00	20-12-2015	17:00	ODB	ER-I	STRINGING WORK OF 765 KV GAYA - VARANASI T/L	BIHAR
278	220 KV MTN-DHANBAD-I	19-12-2015	*09:00*	19-12-2015	17:00	ODB	ER-II/KOL	AMP Works.	DVC
279	132KV Siliguri -Melli TL	19-12-2015	08:30	28-12-2015	17:30	19-12-2015	ER-II/KOL	Replacement of 90KN Disc Insulators string detected during PID and AMC of 132KV Siliguri-Melli TL	SIKKIM
280	221 KV MTN-DHANBAD-II	20-12-2015	*09:00*	20-12-2015	17:00	ODB	ER-II/KOL	AMP Works.	DVC
281	400kV Rourkela - Raigarh II Line	20-12-2015	08:00:00	24-12-2015	17:00:00	ODB	ER-II	For Insulator replacement in River crossing, NH/SH crossing, Raiway crossing etc.	NLDC/ SUBJECT TO APPROVAL OF OTHER RPC IN NEXT OCC
282	Bus Reactor Main Bay(416) at Jeypore	21-12-2015	09:30	21-12-2015	17:30	ODB	ER-II/Odisha	For AMP works	
283	220KV BUS COUPLER AT NPRN	21-12-2015	10:00	24-12-2015	18:00	OCB	ER-I	FOR OVERHAULING OF CGL BREAKER, BOTH BUS WILL BE ISOLATED	BIHAR
284	400KV BUS-1 AT NRNC	21-12-2015	08:00	21-12-2015	18:00	ODB	ER-I	FOR MODIFICATION OF ISOLATOR MECHANICAL INTERLOCK UNDER EXT PACKAGE S-1	
285	765KV NRNC-DHARAMJAIGARH-1	21-12-2015	08:00	24-12-2015	18:00	ODB	ER-I	MODIFICATION WORK FOR ENTRY OF 765 KV RNC - DHARAMJAYGARH -2 AT NRNC UNDER CONSTRUCTION WORK.	NLDC
286	132 KV TBC CB at Birpara	21-12-2015	*09:00*	23-12-2015	17:00	OCB	ER-II/KOL	CB Overhauling	BIHAR
287	132 KV D/C Satgachia-Dhatrigaram T/L of WBSETCL (T.No. 48-49)	21-12-2015	06:00	21-12-2015	17:00	ODB	ER-II	Stringing of 400KV Rajarhat-Purnea Line	WEST BENGAL
288	Power Line Xing: 220 KV S/C FKK-LALMATIA T/L	21-12-2015	06:00	21-12-2015	17:00	ODB	ER-II	Stringing of 400KV Rajarhat-Purnea Line	JHARKHAND
289	400KV ICT#2 MAIN BAY(406) at Sundargarh	22-12-2015	*09:00*	22-12-2015	15:00	ODB	ER-II/Odisha	AMP WORK	
290	400KV KHLG-MAITHON-1 & 2	22-12-2015	08:00	24-12-2015	19:00	OCB	ER-I	FOR POWERLINE CROSSING BETWEEN LOC NO 16 & 17 OF SAID LINE BY NEW 400 KV KHLG - BANKA T/L (OLD ONE BEING SHIFTED UNDER BUS SPLITTING SCHEME AT KHLG END).	NLDC
291	400KV BUS-2 AT NRNC	22-12-2015	08:00	22-12-2015	18:00	ODB	ER-I	FOR MODIFICATION OF ISOLATOR MECHANICAL INTERLOCK UNDER EXT PACKAGE S-1	
292	220KV TRANSFER BUS AT SSRM	22-12-2015	*09:00*	22-12-2015	17:00	OCB	ER-I	FOR AMP WORK.	BIHAR
293	400 KV BSF -LAKHISARAI -1	22-12-2015	10:00	22-12-2015	14:00	ODB	ER-I	LINE BAY AMP AT BSF.	
294	400KV Maithon Durgapur-1 Line	22-12-2015	10:00	22-12-2015	15:00	ODB	ER-II/KOL	Attending hot spot	
295	400 KV TALCHER - ROURKELA-II	22-12-2015	*09:00*	24-12-2015	17:00	OCB	NTPC	ANNUAL MAINTENANCE WORK	
296	132 KV KAHALGAON - KAHALGAON	22-12-2015	*09:00*	22-12-2015	17:30	ODB	NTPC	PM & RELAY TESTING	BIHAR
297	400/220/33 KV , 315 MVA Tr-4 OF 400 KV JEERAT S/S	22-12-2015	07:00	22-12-2015	15:00	ODB	WBSETCL	MAINTENANCE WORK	
298	Bus Reactor-ICT-II Tie Bay(415) at Jeypore	23-12-2015	09:30	23-12-2015	17:30	ODB	ER-II/Odisha	For AMP works	
299	400KV B/R#2 MAIN BAY(416) at Sundargarh	23-12-2015	*09:00*	23-12-2015	15:00	ODB	ER-II/Odisha	AMP WORK	
300	220KV BUS COUPLER BAY AT SSRM	23-12-2015	*09:00*	23-12-2015	17:00	ODB	ER-I	FOR AMP WORK.. BOTH BUS WILL BE IN ISOLATED CONDITION.	BIHAR
301	400KV Maithon Durgapur-2 Line	23-12-2015	10:00	23-12-2015	15:00	ODB	ER-II/KOL	Attending hot spot	
302	400KV B/R#2 TIE BAY(417) at Sundargarh	24-12-2015	*09:00*	24-12-2015	15:00	ODB	ER-II/Odisha	AMP WORK	
303	220KV Maithon - Kalyaneshwari-1 line	24-12-2015	*09:00*	24-12-2015	17:00	ODB	ER-II/KOL	Alignment adjustment of line isolatorand Insulator replacement	DVC
304	132 KV BRP-WB-I (CB)	24-12-2015	*09:00*	27-12-2015	17:00	OCB	ER-II/KOL	CB Overhauling	BIHAR
305	400kV Rourkela - Sundargarh II Line (Old Rourkela-Raigarh III Line)	26-12-2015	08:00:00	30-12-2015	17:00:00	ODB	ER-II	For Insulator replacement in River crossing, NH/SH crossing, Raiway crossing etc.	
306	JEERAT-KTPP	27-12-2015	07:00	29-12-2015	15:00	ODB	WBSETCL	MAINTENANCE WORK	
307	132 KV BRP-WB-II (CB)	28-12-2015	*09:00*	28-12-2015	17:00	OCB	ER-II/KOL	CB Overhauling	BIHAR
308	220 KV Satgachia – Krishnanagar T/L of WBSETCL	28-12-2015	06:00	28-12-2015	17:00	ODB	ER-II	Stringing of 400KV Rajarhat-Purnea Line	WEST BENGAL
309	132KV Rangit- Rangpo TL	29-12-2015	08:30	30-12-2015	17:30	OCB	ER-II/KOL	Replacement of 90KN Disc Insulators string detected during PID and AMC of 132KV Rangit-Rangpo TL	
310	132 KV Satgachia – Katwa T/L of WBSETCL	30-12-2015	06:00	30-12-2015	17:00	ODB	ER-II	Stringing of 400KV Rajarhat-Purnea Line	WEST BENGAL

Annexure-C.2

Anticipated Power Supply Position for the month of
Dec-15

SL.NO		PARTICULARS	PEAK DEMAND MW	ENERGY MU
1		**BIHAR**		
	i)	NET MAX DEMAND	3100	1610
	ii)	NET POWER AVAILABILITY- Own Source (including bilateral)	660	149
		- Central Sector	2192	1375
	iii)	SURPLUS(+)/DEFICIT(-)	-248	-86
2		**JHARKHAND**		
	i)	NET MAX DEMAND	1200	753
	ii)	NET POWER AVAILABILITY- Own Source (including bilateral)	477	242
		- Central Sector	487	289
	iii)	SURPLUS(+)/DEFICIT(-)	-235	-222
3		**DVC**		
	i)	NET MAX DEMAND (OWN)	2685	1560
	ii)	NET POWER AVAILABILITY- Own Source	4410	2355
		- Central Sector	442	297
		Long term Bi-lateral (Export)	1250	930
	iii)	SURPLUS(+)/DEFICIT(-)	917	162
4		**ORISSA**		
	i)	NET MAX DEMAND	3800	2158
	ii)	NET POWER AVAILABILITY- Own Source	2800	1436
		- Central Sector	1045	653
	iii)	SURPLUS(+)/DEFICIT(-)	45	-69
5		**WEST BENGAL**		
5.1		**WBSEDCL**		
	i)	NET MAX DEMAND (OWN)	4969	2472
	ii)	CESC's DRAWAL	0	0
	iii)	TOTAL WBSEDCL's DEMAND	4969	2472
	iv)	NET POWER AVAILABILITY- Own Source	3932	2077
		- Import from DPL	50	28
		- Central Sector	1503	926
	v)	SURPLUS(+)/DEFICIT(-)	516	559
5.2		**DPL**		
	i)	NET MAX DEMAND	250	209
	ii)	NET POWER AVAILABILITY	300	237
	iii)	SURPLUS(+)/DEFICIT(-)	50	28
5.3		**CESC**		
	i)	NET MAX DEMAND	1400	650
	ii)	NET POWER AVAILABILITY - OWN SOURCE	540	255
		FROM HEL	530	235
		FROM CPL/PCBL	0	0
		Import Requirement	330	160
	iii)	TOTAL AVAILABILITY	1400	650
	iv)	SURPLUS(+)/DEFICIT(-)	0	0
6		**WEST BENGAL (WBSEDCL+DPL+CESC)** **(excluding DVC's supply to WBSEDCL's command area)**		
	i)	NET MAX DEMAND	6619	3331
	ii)	NET POWER AVAILABILITY- Own Source	4772	2568
		- Central Sector	2033	1161
	iii)	SURPLUS(+)/DEFICIT(-)	186	399
7		**SIKKIM**		
	i)	NET MAX DEMAND	90	38
	ii)	NET POWER AVAILABILITY- Own Source	16	3
		- Central Sector	111	58
	iii)	SURPLUS(+)/DEFICIT(-)	37	23
8		**EASTERN REGION** **At 1.03 AS DIVERSITY FACTOR**		
	i)	**NET MAX DEMAND**	16984	9450
		Long term Bi-lateral	1250	930
	ii)	**NET TOTAL POWER AVAILABILITY OF ER (INCLUDING C/S ALLOCATION)**	19446	10586
	iii)	**PEAK SURPLUS(+)/DEFICIT(-) OF ER (ii)-(i)**	1211	206

Annexure- D.4

DEMAND FORECAST USING PAST 3 YEARS DATA (January 2016 - March 2016)															
	EASTERN REGION														
										1	2	3	4		
	2012-13			2013-14			2014-15								
ER constituent	Jan-13	#####	Mar-13	Jan-14	#####	Mar-14	Jan-15	Feb-15	Mar-15	2012-13 Average	2013-14 Average	2014-15 Average	Projected Demand for (Jan 2016 to Mar 2016) before normalization	Data given by DICs	Comments
Bihar	1,607	1,592	1657	2,018	2,090	2,115	2,602	2,830	2,874	1,619	2,074	2,769	3,304		
DVC	2,176	2,432	2345	2,550	2,485	2,441	2,467	2,320	2,393	2,318	2,492	2,393	2,477	2550	As per data given by DVC
Jharkhand	1,039	1,097	1172	984	972	1,044	1,018	1,016	1,007	1,103	1,000	1,014	950		
Odisha	3,366	3,393	3516	3,200	3,440	3,672	3,364	3,525	3,892	3,425	3,437	3,594	3,654		
West Bengal	5,785	6,094	6917	6,237	6,303	7,294	6,317	6,721	7,332	6,265	6,611	6,790	7,080		
Sikkim	80	80	80	80	80	85	83	83	77	80	82	81	82		

Notes

1. Projections are based on the past 3 years' monthly Peak Demand Met data available on the website of CEA
2. The above projections are being done for financial year 2015-2016 (Q4) i.e January 2016 to March 2016
3. Projections are being done based on the forecast function available in MS Office Excel
4. CEA Reports can be accessed from the following links:

http://www.cea.nic.in/reports/monthly/gm_div_rep/power_supply_position_rep/peak/Peak_2015_03.pdf
http://www.cea.nic.in/reports/monthly/gm_div_rep/power_supply_position_rep/peak/Peak_2015_02.pdf
http://www.cea.nic.in/reports/monthly/gm_div_rep/power_supply_position_rep/peak/Peak_2015_01.pdf
http://www.cea.nic.in/reports/monthly/gm_div_rep/power_supply_position_rep/peak/Peak_2014_03.pdf
http://www.cea.nic.in/reports/monthly/gm_div_rep/power_supply_position_rep/peak/Peak_2014_02.pdf
http://www.cea.nic.in/reports/monthly/gm_div_rep/power_supply_position_rep/peak/Peak_2014_01.pdf
http://www.cea.nic.in/reports/monthly/gm_div_rep/power_supply_position_rep/peak/Peak_2013_03.pdf
http://www.cea.nic.in/reports/monthly/gm_div_rep/power_supply_position_rep/peak/Peak_2013_02.pdf
http://www.cea.nic.in/reports/monthly/gm_div_rep/power_supply_position_rep/peak/Peak_2013_01.pdf

Generation Projection- Eastern Region (January'16 - March' 16)

				Generation declared Commercial from 1st July '15 to 30th September '15					Generation declared/expected to be declared Commercial from 1st October '15 to 31st December'15								
Sl. No.	Entities	Region	Projections based on 3 Years Data	Bus Name	Unit No.	Installed Capacity	Gen. considered	Sub Total	Bus Name	Unit No.	Installed Capacity	Gen. considered	Sub Total	TOTAL	Comments From DICs /Others (if any)	Figure as per Comments/PoC Data	Projected Generation before normalization w.r.t projected All India Peak Demand
			(MW)			(MW)	(MW)	(MW)			(MW)	(MW)	(MW)	(MW)			(MW)
1	West Bengal	ER	4791	Haldia TPP	1	300	196	393						5184		5184	5184
				Haldia TPP	2	300	196										
2	Odisha	ER	2921											2921		2921	2921
3	Bihar	ER	189											189		189	189
4	Jharkhand	ER	517											517		517	517
5	Sikkim	ER	0											0			0
6	Chujachan	ER	73											73			73
7	DVC	ER	1730											1730			1730
8	Durgapur Steel	ER															
9	Koderma TPP	ER															
10	MPL	ER	1013											1013			1013
11	Sterlite	ER	746											746			746
12	Teesta	ER	427											427	As per forecasted generation given by NHPC	434	434
13	Kahalgaon	ER	2119											2119	NTPC projected generation calculated based on last three yrs data as given by NTPC		2119
14	Farakka	ER	1913											1913			1913
15	Talcher	ER	988											988			988
16	Rangeet	ER	60											60	As per forecasted generation given by NHPC	61	61
17	Corporate Power	ER												0			0
18	Adhunik Power	ER	281											281			281
19	Barh	ER	734											734	NTPC projected generation calculated based on last three yrs data as given by NTPC		734
20	Kamalanga TPP (GMR)	ER	831											831	As per recent generation trend	660	660
21	JITPL	ER	543	JITPL*	2	600	393	393						936			936
22	Jorthang	ER		Jorthang	1	48	48	95						95			95
				Jorthang	2	48	48										
23	Bhutan	ER	349											349			349
	TOTAL		20225											21105			20942

Note:

1. Projections are based on monthly maximum injection in the last 3 years from actual metered data.
2. Generation forecast has been done based on the following criteria

(i) If there is an increasing trend then last year average generation has been considered

(ii) Otherwise average of past three year average generation has been considered

3. In case of new generators where past data was not available following has been assumed

(i) 1 plf for hydro generators

(ii) 0.7 plf for thermal generators.

(iii) 0.3 plf for gas stations

3.A. Regional Entities Generation:

	Station/ Constituents	Inst. Capacity (MW)	Peak MW (For Jan to March-16)	Remarks
NTPC	Farakka STPS - I & II(3*200+2*500)	1600		Data Already Submitted
	Farakka STPS - III(500)	500		
	Kahalgaon STPS - I(4*210)	840		
	Kahalgaon STPS - II(3*500)	1500		
	Barh STPS - I & II (660)	660		
	Talcher STPS - I(2*500)	1000		
	Talcher STPS - II(4*500)	2000		
	Sub Total Thermal			
NHPC	Teesta(3*170)	510		Already Submitted
	Rangit(3*20)	60		
	Sub Total Hydro			
BHUTAN	Kurichu(4*15)	60		
	Tala(6*170)	1020		
	Chukha(4*84)	336		
	Sub Total Hydro			
IPP	Sterlite(3*600)	1800		
	MPL(2*525)	1050		
	APNRL(270*2)	540		
	GMR(2*350)	700		
	JITPL(2*600)	1200		
	Sub Total IPP Thermal			
	Chuzachen HEP(2*55)	**110**		
	Jorethang HEP(2*48)	**96**		
	Sub Total IPP Hydro			

3.B. State Entities Generation:

	Station/ Constituents	Inst. Capacity (MW)	eak MW (For Jan to March-16)	
BIHAR	Baruni TPS(2*110)	220		
	Muzaffarpur TPS(2*110)	220		
	Total BIHAR			
JHARKHAND	Patratu TPS(4*50+2*100+4*110)	840		
	Tenughat TPS(2*110)	420		
	Subernrekha (2*65)	130		
	CPP IMPORT			
	Total JHARKHAND			
	Station/ Constituents	**Inst. Capacity (MW)**		
DVC	Chandrapura TPS(3*140+2*250)	920		
	Bokaro'B TPS(3*210)	630		
	Waria TPS(140+210)	350		
	Mejia TPS(4*210+2*250)	1340		
	Mejia'B TPS(2*500)	1000		
	Durgapur STPS (2*500)	1000		
	Koderma TPS(500)	500		
	Maithon(2*20+23.2)	63		
	Panchet(2*40)	80		
	Total DVC			
ODISHA	Talcher TPS(4*62.5+2*110)	470		Data Already Submitted
	IB Valley TPS(2*110)	420		
	Burla(2*49.5+3*37.5+2*32)	276		
	Chipilima(3*24)	72		
	Balimela(2*75+6*60)	510		
	Rengali(5*50)	250		
	Upper Kolab(4*80)	320		
	Indravati(4*150)	600		
	Machkund Share	57		

	SEL Injection	600		
	GMR Injection	350		
	Total CPP Import			
	Others	**0**		
	Total Odisha			
WEST BENGAL	Santaldih TPS(2*250)	500		
	Bandel TPS(4*82.5+210)	540		
	Kolaghat TPS(6*210)	1260		
	Bakreswar TPS(5*210)	1050		
	DPL TPS(3*75+110+300)	635		
	SAGARDIGHI TPS(2*300)	600		
	Purulia PSP(G)(4*225)	900		
	Jaldhaka(3*9+2*4)	35		
	Ramam(4*12.5)	50		
	Tista(9*7.5)	68		
	Total CPP Import			
	Others			
	Total WEST BENGAL			
CESC	Budge-Budge TPS(3*250)	750		
	Titagarh TPS(4*60)	240		
	Southern TPS(2*67.5)	135		
	New Cossipore TPS(2*30+2*50)	160		
	Haldia TPP	600		
	Thermal (Total)			
	Others	**0**		
	Total CESC			