EASTERN REGIONAL POWER COMMITTEE

MINUTES OF 24th PROTECTION SUB-COMMITTEE MEETING HELD AT ERPC, KOLKATA ON 20.10.2014 (MONDAY) AT 11:00 HOURS

List of participants is enclosed at **Annexure-A**

PART – A

ITEM NO. A.1: Confirmation of minutes of 23rd Protection sub-Committee Meeting held on 25th September, 2014 at ERPC, Kolkata

The minutes of 23rd Protection Sub-Committee meeting held on 25.09.14 circulated vide letter dated 09.10.14.

No comments have been received from any constituent.

The minutes of the above meetings may be confirmed.

Deliberation in the meeting

Members confirmed the minutes of 23rd Protection sub-Committee meeting.

PART – B

ANALYSIS & DISCUSSION ON GRID INCIDENCES WHICH OCCURRED IN CTU/STU SYSTEMS DURING SEPTEMBER, 2014.

(The detailed report was highlighted by ERLDC/respective constituents)

ITEM NO. B.1: Total power failure at 132 kV Purnea (BSPHCL) on 03.09.14

At 12:20hrs, total power failure occurred at 132kV Purnea (BSPHCL) s/s due to R-Ø LA of 132kV Purnea (PG)-Purnea (BSPHCL)-II burst at Purnea (PG) end. Following lines tripped.

- 132kV Purnea (PG)-Purnea (BSPHCL)-I, II & III
- 132kV Purnea (BSPHCL) - Forbisgunj tripped on O/C

Analysis of events:

It appears that the sequence of events was initiated due to bursting of R-Ø of in132kV Purnea (PG)-Purnea (BSPHCL)-II line at PG end. 132kV Purnea (PG)-Purnea (BSPHCL)-I & II tripped from Purnea (PG) instantaneously. However breakers at BSPHCL end did not open properly due to which in132kV Purnea (PG)-Purnea (BSPHCL)-III tripped from BSPHCL end. With the above trippings, entire downstream load of Purnea (BSPHCL) started getting power through 132kV Purnea (BSPHCL) – Forbisgunj-Kishanganj- Purnea (PG) link and thus 132kV Purnea (BSPHCL) – Forbisgunj line tripped on O/C protection.

Remedial Measures/Suggestions:

i) The reasons for relays at Purnea (BSPHCL) end failing to clear the fault need to be investigated
ii) In the 20th PCC meeting Dtd.19/06/14, the following were agreed upon:

- Proper co-ordination & grading of over current relays for 33 kV feeders

- Co-ordination of over current relays timings of 132/33 kV ICTs with 33 kV feeders
- Checking of operating time of all CBs at Purnea & its downstream systems and rectifying/replacing the faulty CBs, if any. Also, protection audit was again recommended for Purnea S/s of BSPHCL.

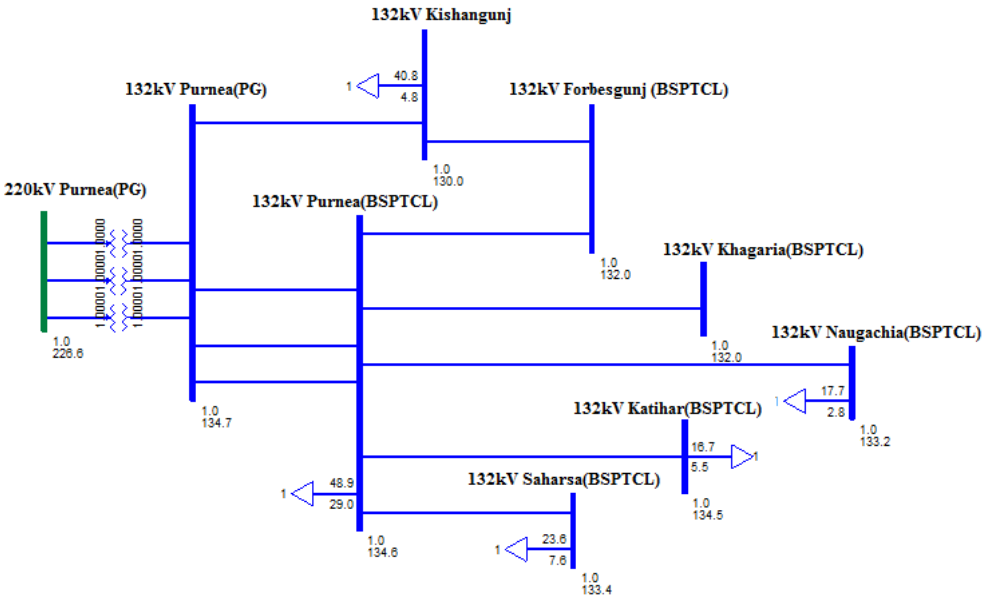

BSPTCL may explain.

<u>Deliberation in the meeting</u>

ERLDC explained that PMU plot shows the fault was persisted for 600ms.

BSPTCL informed that Purnea (BSPTCL-Purnea (PG) line- II and III are tripped from their end. CT polarity of line III was in reverse direction hence the relay has been operated for the fault in line-II.

BSPTCL informed the CT polarity has been corrected.

PGCIL informed that all the three lines were tripped from their end on directional over current relays.

PCC felt there has been delay in CB operation on either side of the circuit-II.

Accordingly, PCC advised both BSPTCL and PGCIL to check the CB timing and report in next PCC meeting.

Moreover, PCC felt it is difficult to provide relay coordination for such short lines using over current protection and suggested to implement pilot wire protection as early as possible.

PGCIL informed that pilot wire protection will be implemented under GSS up gradation of 400kV/220kV/132kV Purnea S/s.

Further, PCC advised BSPTCL to submit the tripping reports of Purnea S/s for three (3) months tripping after the visit of ERPC team for analysis purpose. BSPTCL agreed.

ITEM NO. B.2: Disturbance at 220 kV Bokaro S/s (DVC) on 23.09.14.

At 11:05hrs, total power failed at BTPS 'B' along with observation of heavy sound and flashing at dead end tower of 200kV BTPS-Jamshedpur-I line at BTPS'B' end and all the 220kV Lines emanating from Bokaro tripped from remote ends only.

The following elements tripped:

- 220kV Bokaro-Jamshedpur-I&II
- 220kV Bokaro-Chandrapura-I&II
- 220kV Bokaro-Ramgarh-I&II
- BTPS U#3 with approximate generation of 200 MW

Analysis of events:

It appears that, sequence of events were initiated due to fault in 200kV BTPS-Jamshedpur-I line(very near to Bokaro'B' end as indicated by heavy sound and flashing observed at dead end tower) which was not cleared from Bokaro end. Failure in clearance of the fault from Bokaro'B' end resulted in a 220kv Bus-II Bus fault. However, as there as was no LBB operation at Bokaro'B' both 220kV Bus-I & II went on feeding the fault and all 220kV lines tripped from their remote ends. The status of LBB at for 220kV Bokaro'B' Bus needs to be checked in this regard. Also tripping of 220kV Bokaro-Jamshedpur-I on Zone-3 protection from Jamshedpur end seems erroneous as the fault was within Zone-II from Jamshedpur and got cleared in 400ms.

Remedial Measures/Suggestions:

• Reason for non-opening of breaker of 220kV Bokaro-Jamshedpur-I at Bokaro needs to be explained.

• Status of LBB at Bokaro'B' end needs to be checked/ investigated.

• Relays at Jamshedpur(DVC) end also needs to be checked/audited.

• The fault persistence time of 400ms is a violation of CEA (Grid Standards) Regulations, 2010. As per Cl.3 (e) regarding 'Standards for Operation and Maintenance of Transmission Lines', the maximum fault clearance time for 220kV Transmission system is 160ms.

DVC may explain.

<u>Deliberation in the meeting</u>

DVC explained that ABB make REL 670 as well as back up relay of same make at BTPS end failed to detect fault in 220kV BTPS-Jamshedpur-I line. As a result, lines connected to BTPS tripped from remote end.

DVC informed that, REL 670 of ABB make has failed to operate on several occasions. The issue was discussed in last PCC meeting wherein DVC informed the issue was taken up with ABB and requested Powergrid to inform their experience with ABB 670 relays.

PCC once again requested Powergrid to share their experience with ABB.

PCC advised DVC to take appropriate action to rectify the relays or replace the relays.

DVC assured that the action has been initiated with ABB and the relay has been sent for repair. DVC also requested ERPC to highlight these types of problems originating from suppliers' side in forum like NPC or board so that it could get proper attention from higher authorities.

ITEM NO. B.3: Trippings of all lines at 220 kV Chandil S/s (JSEB) on 21.09.14.

At 06.32 hrs, total power failure occurred at 220kV Chandil S/s.

Following lines tripped:

- 220kV Chandil-Ranchi (tripped on R-B fault. DP at Ranchi end shows fault at 70km)
- 220kV Chandil-Santaldih (tripped from Chandil end only)
- 220kV Chandil-Ramchandrapur (tripped from Chandil end only)
- 132kV Chandil-Hatia
- 132kV Chandil-Rajk'swan

- 132kV Chandil-Adityapur
- 132kV Chandil-Golmuri
- 132kV Chandil-Manique
- 132kV Ramchandrapur-Adityapur D/C on over load

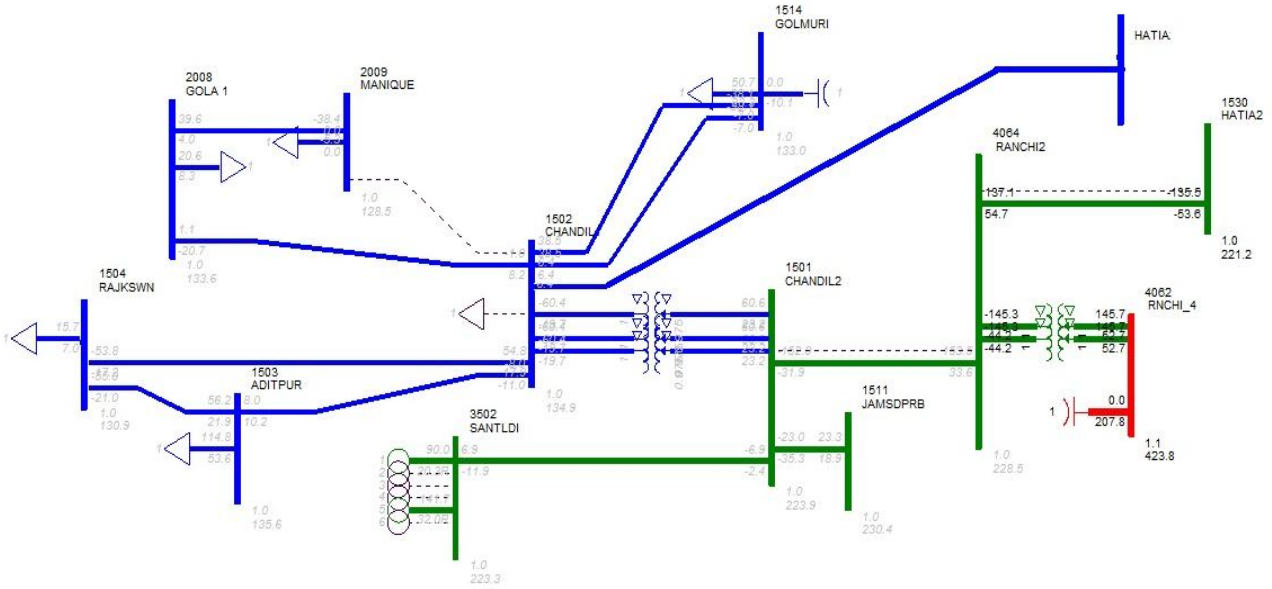

JUSNL may explain.

<u>Deliberation in the meeting</u>

JUSNL informed that in this incidence which is akin to incidence of 25.08.14 when all the lines from 220kV Chandil were tripped on LBB operation. LBB operated instantaneously due to malfunction of LBB timer and tripped all the lines. The issue has been taken up with OEM and the same will be rectified by 30th October, 2014.

ITEM NO. B.4: OPTCL System

1. **Trippings of all lines at 220 kV Duburi S/s on 08.09.14.**

At 11:28hrs, while changing the feeders from 220kV Bus-II to Bus-I at 220kV Duburi S/s, Bus fault occurred due to which all the 220kV feeders emanating from Duburi tripped. 132kV Duburi-OPCL-TTPS-I and 132kV Duburi-TTPS-II tripped on O/C protection from OPTCL and TTPS end respectively.

During the restoration process, at 11:48hrs, while charging 220kV Duburi-New Duburi-II, 220kV Meeramundali-Duburi-I tripped on DP, Z-4. Again at 12:37hrs, while charging 220kV Duburi-New Duburi-II, 220kV Meeramundali-Duburi-II tripped on DP relay indication.

Analysis of events:
It appears that the sequence of events were initiated due to occurrence of Bus fault at 220kV Duburi S/s while changing the feeders from 220kV Bus-II to Bus-I. After investigation, it was found that possible PT cable fault had occurred in 220kV Bus-I and there was a delayed opening of bus coupler due to which Bus-II also became dead. Power supply interrupted at 220kV New Duburi S/s which was radial on Duburi and the entire 132kV loads at Duburi and Paradeep became radial on TTPS. As a consequence both 132kV Duburi-OPCL-TTPS-I and 132kV Duburi-TTPS-II tripped on O/C protection from OPCL and TTPS end respectively.

Remedial Measures/Suggestions:
- It was found that various 220kV feeders tripped while restoration was carried out which indicates that problem at Duburi was not attended properly.

- There was no prior intimation of feeder changing from Bus-II to Bus-I.
- While Meeramundali and TTPS is the only source of supply to the entire 220kV and 132kV loads of Duburi, New Duburi and Paradeep, better load management should be carried out while giving the shutdown of any of the incoming feeders so that unnecessary tripping can be avoided on account of over loading of transmission line.

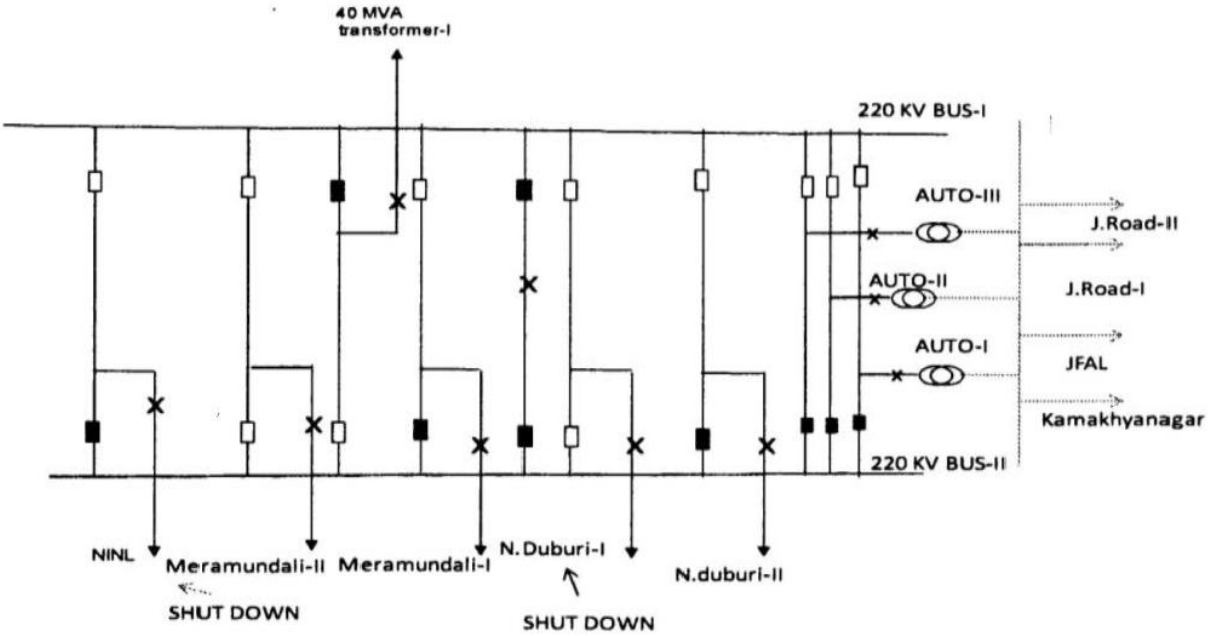

OPTCL may explain.

Deliberation in the meeting

OPTCL informed that there was fault in PT cable and while changeover from Bus-II to Bus-I the PT selection relay also malfunctioned due to which the PT supply was not extended to the distance relays which resulted in tripping of all feeders from Dhubri. OPTCL informed that now it has been rectified.

PCC advised OPTCL to incorporate PT fuse failure in Distance relays to avoid such trippings.

2. **Trippings of all lines at 400/220 kV Mendhasal S/s on 10.09.14.**

At 13:30hrs, all the 400kV and 220kV feeders emanating from Mendhasal S/s tripped along with two ICTs and total power supply failed at Mendhasal S/s.220kV Bus at Chandaka and Bidanasi also became dead. Following elements tripped:

- 400kV Meramundali-Mendhasal (Tripped at both ends)
- 315 MVA, 400/220kV ICT-I & II at Mendhasal (Tripped on both sides)
- 400kV Baripada-Mendhasal-D/C (Tripped at both ends)
- 220kV Chandaka-Mendhasal-III & IV (Tripped at Chandaka end)
- 220kV Bhanjanagar-Mendhasal (Tripped at Bhanjanagar end)
- 220kV Nayagarh-Mendhasal (Tripped at Nayagarh end)
- 220kV Narendrapur-Mendhasal (Tripped at Narendrapur end)
- 220kV Meramundali-Bidanasi (Tripped at Meramundali end)

Analysis of events:
It appears that, sequence of events initiated due to fault downstream of 400kV Mendhasal S/s for which was there was a delayed fault clearance from 220kV Mendhasal end. Tripping report obtained from GRIDCO shows that, earth fault in Y-Ø was detected in 220kV Chandaka-Mendhasal-IV which tripped from Chandaka end only. Also, fault was detected in 220kV Bhanjanagar-Mendhasal. It is suspected that delayed clearance of downstream 220kV faults lead

to further tripping in the upstream 400kV system. Weather situation observed at that time were of inclement conditions. Also, PMU plot shows that the fault was persisted for 480ms. It can also be observed that all other 220kV lines tripped from remote end only. It is apprehended that due to delayed fault clearance, both the 400/220kV, 315MVA ICTs at Mendhasal also tripped on O/C & E/F relay. The DEF (Directional Earth Fault) relay at Meeramundali may have also got actuated due to such delayed fault clearance (DT signal was not sent to Mendhasal). It is apprehended that due to loss of downstream load and tripping of 400kV Meeramundali-Mendhasal from Meeramundali end, voltage at Mendhasal shot up and 400kV Baripada-Mendhasal-D/C tripped on actuation of O/V stg-1.

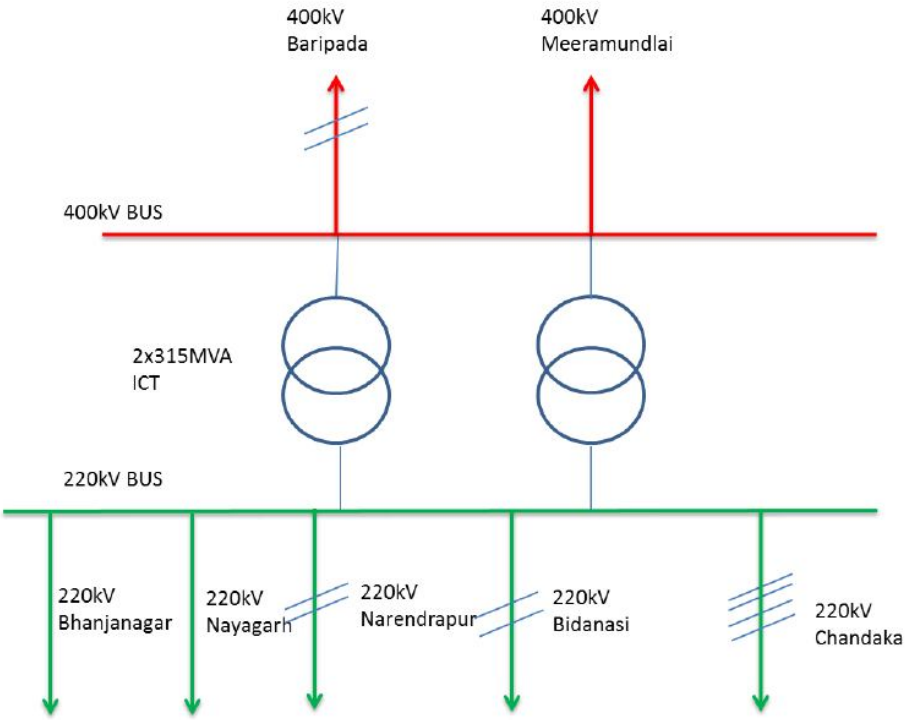

Remedial Measures/Suggestions:

- Audit/testing of relays/breakers at Mendhasal needs to be done.
- At 13:30hrs, the fault persistence time of 480ms is a violation of CEA (Grid Standards) Regulations, 2010. As per Cl.3 e) regarding 'Standards for Operation and Maintenance of Transmission Lines', maximum fault clearance time for 220/132kV Transmission system is 160ms.

OPTCL may explain.

<u>Deliberation in the meeting</u>

OPTCL informed that on that day there was rainy and stormy weather due to which there may be high resistive fault in line. At Mendhasal S/S the relay had initiated but did not trip the line. As remedial measures they have already planned for checking of resistive reach settings of relays.

PCC advised OPTCL to carry out testing of all the relays at Mendhasal S/s and also to review the resistive reach settings. OPTCL agreed.

3. **Disturbance at 400/220 kV Meramundali S/S on 13.09.14.**

At 19:22 hrs, 400kV Meeramundali-Duburi (idle charged) tripped on D/P, Y-ph, F/F, 103.7km. Simultaneously, 400kV Meeramundali-Mendhasal line tripped at Meeramundali and 400kV Meramundali-GMR tripped from GMR end.

OPTCL may explain.

Deliberation in the meeting

OPTCL informed that GMR end settings of DPR is Z2- instantaneous with higher reach so this line pick up the fault and tripped. The correct settings were already provided to GMR in the joint meeting held with GMR and they have to change their relay settings. OPTCL also informed that 400kV Meramundali-Mendhasal line was on tie-breaker and the main breaker is under replacement.

4. Disturbance at 400 kV Angul S/s & 400/220 kV Meramundali S/S on 14.09.14.

At 18:41hrs, 400kV Angul-TSTPP tripped due to a transient fault wherein Autoreclose did not successfully operate at Anugul end. Subsequently, at 18:55hrs,due to suspected fault in 400kV Meramundali-IBTPS-I which was idle charged from Meramundali end which was not timely cleared at Meramundali end, LBB operated at Meramundali and Bus-II at Meramundali became dead. 400kV Angul-Bolangir also tripped and 400kV Bus at Angul became dead. Following elements tripped:

- 400kV Angul-TSTPP (Tripped at Angul end)
- 400kV Angul-Bolangir (Tripped at Bolangir end)
- 400kV Meramundali-IBTPS-I (idle charged) (Tripped at Meramundali end)
- 400 kV Meramundali-Duburi Ckt-II (idle charged from Meramundali end) (Tripped at Meramundali end)
- 400kV Meramundali-Mendhasal (Tripped at Meramundali end)
- 400 kV Meramundali-GMR (Tripped at GMR end)
- 400 kV ICT-II at Meramundali (Tripped at Meramundali end)
- 400 kV Meramundali-JSPL Ckt-II (Tripped at Meramundali end)
- 400 kV Meramundali-Angul Ckt-I (Tripped at both ends)

MERAMUNDALI S/S 14.09.2014 AT 18:55 Hrs

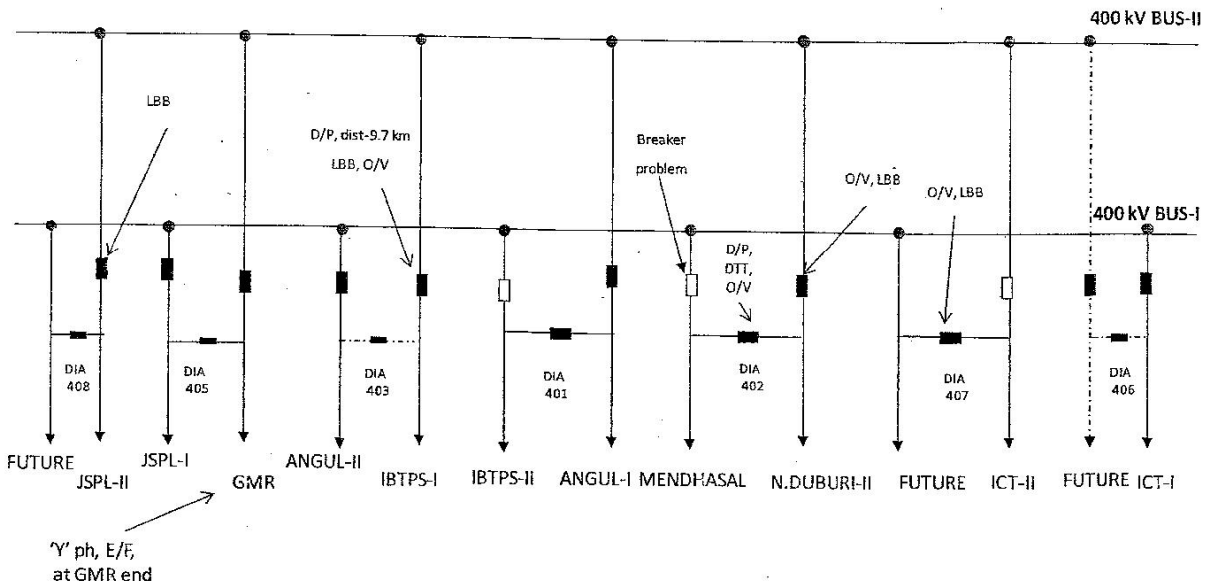

Analysis of events:

It appears that, there were two separate events occurring at 18:41hrs and at 18:55hrs. At 18:41hrs 400kV Angul-TSTPP tripped from Angul end on R-N fault. At TSTPP end Auto reclosure

operated successfully indicating that the fault was transient in nature, but at Angul end Auto reclosure got blocked which needs to be investigated.

Subsequently, at 18:55hrs, 400kV Meeramundali-IBTPS-I (idle charged from Meramundali end) tripped on Y-N fault. However as reported by OPTCL, due to suspected delayed tripping of 400kV Meeramundali-IBTPS-I from Meeramundali end, LBB got actuated at Meramundali end. Hence, all the elements connected to 400kV Bus-II of Meramundali tripped. However, the breaker connected to Bus-II of 400kV Meramundali-GMR at Meramundali end tripped from remote end only which needs to be investigated. Also, presently the main CB of 400kV Meeramundali-Mendhasal was not in service and said line was charged through the tie CB of 400 kV Meeramundali-Duburi Ckt-II which was connected to Main Bus-II. Hence, though the line tripped on operation of LBB, the tie breaker observed the fault and tripped on DP. Thus, tripping of 400 kV Meeramundali-Duburi Ckt-II(idle charged from Meramundali end) on LBB, led to outage of 400kV Meeramundali-Mendhasal also. Relays at Angul end of 400kV Anugul-Meramundali-I had also picked up detecting Y-N fault beyond Z-3 due to delayed opening of breaker of 400kV Meramundali-IBTPS-I at Meeramundali end but the relays did not trip. This is suspected to be a maloperation at Anugul end. Hence, finally the fault was cleared from Bolangir end with DT was sent to Angul. It is suspected that JSPL units might have tripped due to the above incident. Hence, now, only two lines and one ICT viz. 400 kV Meeramundali-JSPL Ckt-I, 400 kV Meeramundali-Angul Ckt-II and 400/220kV ICT-I remained connected with Bus-I at Meeramundali. It is suspected that ICT-I had also tripped and with JSPL-Meramundali-I tripping, there was no source/evacuation path from Meramundali Bus-I and 400kV Anugul-Meramundali-II went under floating condition. Subsequently, the line tripped on receipt of DT at 19:05Hrs from Meramundali end on suspected hand tripping of the idle line from Meramundali end.

Remedial Measures/Suggestions:

- The fault persistence time of 280ms is a violation of CEA (Grid Standards) Regulations, 2010. As per Cl.3 (e) regarding 'Standards for Operation and Maintenance of Transmission Lines', the maximum fault clearance time for 400kV Transmission system is 100ms.
- Failure in tripping of 400kV Meeramundali-GMR from Meramundali end on operation of LBB (though other lines connected to Bus-II tripped) needs to be checked. The line tripped from GMR end only even after LBB actuation and the same needs to be investigated.
- Failure in tripping of 400kV Meramundali-Anugul-I from Meramundali end on operation of LBB(though other lines connected to Bus-II tripped) needs to be checked. Also failure in clearing the fault from Anugul end also needs to be investigated (relays at Anugul end had only picked up).
- OPTCL is requested to expedite commissioning of the pending main/tie breakers presently not in service at Meramundali to enable stronger coupling of Bus-I & II at Meramundali.
- Blocking of Auto reclose at Angul end though the same was successful at TSTPP end needs to be investigated.
- Tripping of 400/220kV ICT-I and 400kV JSPL-Meramundali-I needs to be confirmed and corroborated.

OPTCL and Powergrid may explain.

<u>Deliberation in the meeting</u>

The tripping at Angul S/s cannot be analyzed due to non-representation of Odisha-Powergrid.

OPTCL informed that due to some problem in trip circuit there was delayed clearance of fault in the idle charged 400kV Meramundali-IBTPS-I line which activated the LBB at Meramundali S/s and all the elements connected to Bus-II tripped.

PCC advised OPTCL to review the zone settings time to time for under construction lines which were idle charged and the entire line should be covered in zone-1.

PCC advised OPTCL to submit the complete plan of CB replacing and bus-bar protection installation at Meramundali S/s. OPTCL agreed.

ITEM NO. B.5: Tripping of 400 kV Kahalgaon-Barh D/C on 19.09.14 & 24.09.14.

At 11.43 hrs on 19.09.14 and at 14:15hrs on 24.09.14, 400 KV Kh- Barh#1 & 2 tripped from Kahalgaon end on DT receive.

NTPC may explain.

Deliberation in the meeting

NTPC presented the detail of the tripping with a presentation. NTPC explained that commissioning work related to bays of Patna-II and Gorakhpur-II at Barh Stage-II, Bus #4 is going on. On that day there was problem in DC contact due to which the LBB of tie breaker of Kahalgaon-II and Gorakhpur-II got initiated which lead to tripping of Kahalgaon-II line. Further, there was mechanical problem in tie breaker of Kahalgaon-I and Patna-I due to which Kahalgaon-I also tripped and Bus#4 became dead.

PCC advised NTPC to take proper precaution while performing the commissioning related work and to ensure that the remaining system should not disturbed.

PART- C

FOLLOW-UP OF DECISIONS OF THE PREVIOUS PROTECTION SUB-COMMITTEE MEETING(S)

(The status on the follow up actions is to be furnished by respective constituents)

ITEM NO. C.1: Repeated tripping of 400kV Durgapur-Farakka – I on 28.08.14

ERPC Secretariat vide letter dated 05.09.14 requested Powergrid and NTPC to furnish the details along with all records (SOE, DR, Relay flags and SLD) for meaningful analysis during the meeting.

In 23rd PCC, NTPC reported that similar incident took place on 25.08.2014 and 27.08.2014 respectively. During inspection on 28.08.2014, it was observed that some cables termination at junction box of PLCC panel remained loose and being shorted. The PLCC panels were tested and same has been rectified. Thereafter, there was no report of such incidences.

Powergrid informed that only Direct Trip (DT) signal had been received at Durgapur end from Farakka STPS on the above occasions.

PCC advised NTPC to submit the action taken report of PLCC panels testing to ERPC/ERLDC.

NTPC may update.

Deliberation in the meeting

NTPC has submitted the report.

ITEM NO. C.2: Bihar System

1. **Tripping at 220 kV Biharshariff (BSPTCL) S/S at 12:26 hrs on 20/08/14.**

At 12:26hrs, 220kV Tenughat-Biharsariff line tripped on earth fault from both the ends. At the same time all the three 400/220kV, 315MVA ICTs at Biharsariff (PG) tripped on back up O/C protection leading to total power failure at 220kV Biharsariff (BSEB) S/s. 220kV Biharsariff-Bodhgaya-D/C also tipped.

It appears that sequences of events were initiated due to Y-Ø earth fault occurred in 220kV Tenughat-Biharsariff line. However there was a delayed clearance of the said fault from Biharsariff (BSPHCL) end (PMU plot of Sasaram shows that the fault was getting cleared in 1400ms) due to which all the three 400/220kV, 315MVA ICTs tripped from Biharsariff(PG) end on backup O/C protection from HV side. 220kV BIharshariff-Bodhgaya-D/C (idle charged from Biharshariff) also tipped at the same time as reported by BSPHCL. As the Biharsariff (BSPHCL) had no other source to feed the downstream load, total power failure occurred at Biharsariff (BSPHCL) end.

Remedial Measures/Suggestions:

Delayed clearance of faults from Biharshariff (BSPHCL) end for 220kV Tenughat-Biharshariff line needs to be checked.

BSPTCL explained that the fault was detected in zone 1 of 220 kV Tenughat- Biharsharif line from Biharsharif end but CB operation might have delayed the fault clearance. BSPTCL informed that they are facing DC supply problem, which may cause delayed CB operation. They reported that DC cable flashing was also observed behind the control panels and same was rectified.

PCC advised BSPTCL for thorough checking of DC supply system and submit the status report to ERLDC/ERPC Secretariat within ten (10) days. BSPTCL agreed.

In 23rd PCC, while enquiring about simultaneous 3x315 MVA ICT tripping at Biharsharif S/s, Powergrid informed that the DR plots indicated the fault was isolated by ICTs in 600 msec. However, ERLDC mentioned that PMU plots obtained from Sasaram S/s showed the total fault duration of 1.4sec.

It could not be concluded the reason behind such long duration of fault isolation. It was opined that DR plots at TVNL end may highlight additional information in this respect. Accordingly, PCC advised JSEB to collect the DR files on 20.08.2014 from TVNL and submit soon to ERLDC/ERPC. JSEB agreed.

BSPTCL and JSEB may update status.

Deliberation in the meeting

BSPTCL informed that they have tested the DC supply output and reported that 5V negative voltage was observed. They are planning to shift the Panels to new control room which is at higher level from the ground.

On submitting the DR files from TVNL end, JSEB agreed to send within a week.

2. **Tripping at 220 kV Biharshariff (BSPTCL) S/S at 08:15 hrs on 26/08/14.**

- 132 KV Biharsharif-Sheikhpura-Jamui T/L tripped on relay indication distance protection PC I, 86 DC and 1A at 8:15 hrs of 26 Aug 2014.

- 220/132 KV 150 MVA Transformer also tripped simultaneously at 8:15 hrs of 26 Aug 2014.

In 23rd PCC, BSPTCL informed that there was B-ph conductor snapping with ground in 132 KV Biharsharif-Sheikhpura-Jamui T/L which tripped on distance protection. But, the tripping of 220/132 KV, 150 MVA Transformer at Biharsharif might be due to problem in control cable.

PCC advised BSPTCL to check the healthiness of the relays & control cable of Biharsharif S/s and submit the report to ERPC/ERLDC within 10 days.

BSPTCL agreed.

BSPTCL may update the status.

Deliberation in the meeting

As deliberated in previous agenda point.

3. **ERPC recommendations on repeated trippings at 132 kV Purnea (BSPTCL) S/S**

In 21st PCC, in view of repeated uncoordinated tripping from 220 kV Purnea S/s (PGCIL) due to various line faults in BSPTCL downstream system, it was decided that ERPC team comprises of ERPC, ERLDC, Powergrid, WBSETCL, DVC and BSPTCL members will visit for Audit/testing of relays in neighboring substations in around 220 kV Purnea S/s to review the protection philosophy in 1st week of August, 2014.

Accordingly, ERPC team members visited the 132kV Purnea(PG), 132kV Purnea(BSPTCL) and 132kV Forbesganj S/s from 11-08-2014 to 13-08-2014.

In 22nd PCC, ERPC team presented the audit report of the 132 kV Purnea & adjoining sub-stations and highlighted the list of deficiencies in the protective system installed at there. The recommendation for remedial measures for those sub-stations is also presented.

After detailed deliberations PCC advised BSPTCL to comply all the recommendations at the earliest. BSPTCL agreed to comply the recommendations as pointed by the ERPC team within a month.

BSPTCL was also advised to carry out Tan-Delta (tanδ) and thermo vision tests for all CTs.

Further, PCC referred the issue to TCC for further guidance and advised the team to present the report in the 28th TCC/ERPC meeting scheduled on 12/13.09.2014.

In 28th TCC, Audit team has presented their observations and recommendations of 132kV Purnea and Forbesgunj (BSPTCL). During presentation three types of recommendations (short term, medium term and long term) were given.

TCC advised BSPTCL to implement the short term and medium term recommendations within 2/3 months time and to place the roadmap for implementation of all the recommendations to ERPC Secretariat at the earliest.

23rd PCC advised BSPTCL to submit the action plan at the earliest. BSPTCL agreed.

BSPTCL may update.

Deliberation in the meeting

BSPTCL has submitted the action plan, which is enclosed at **Annexure-C.2***.*

PCC advised BSPTCL to give the details of last month trippings in around Purnea BSPTCL system along with details to assess the improvement after incorporating ERPC recommendations.

BSPTCL agreed.

ITEM NO. C.3: OPTCL System

1. **Disturbance at OPTCL on 26th August 2014**

At 23:08hrs of 26th August 2014, 400kV Indravati(PG)-Indravati(O) tripped on overvoltage (Stg-1) from PGCIL end and 400/220kV ICT –I &II at Indravati PH tripped with over flux relay indication (as per information received from OPTCL). Further, 400kV Indravati(PG)-Jeypur(PG) S/C line tripped on inst. Over-current protection from Jeypur(PG) end only. Subsequently 220kV Jayanagar –Jeypore D/C tripped at Jayanagar on actuation of over current relay indication and

220kV Theruvali-Bhanjanagar D/C tripped due to R-ph fault. Indravati, U. Kolab and Balimela hydro stations got islanded with loads of Theruvali and Jeynagar complexes. All the running units of Balimela (except #4,#7 and #8), Indravati and U.Kolab tripped . Thus 220kV bus at Jayanagar became dead. And also due to tripping of 220kV Theruvali-Bhanjnagar D/c from both end Theruvali S/S became dead.

Following lines/elements tripped:

1. 400/220kV ICT –I &II at Indravati PH tripped
2. 400kV Jeypore-Indravati 220kV Jayanagar-Jeypore D/C
3. 220kV Theruvali-Bhanjnagar D/C
4. 220kV Jayanagar-U.Kolab D/C
5. 220kV Theruvali-U.Kolab
6. U.Kolab U# I,II,III & IV
7. Balimela U# III, V,VI

Due to this disturbance around 800 MW of load loss and 1200 MW of generation loss occurred in Odisha sytem.

Subsequently, a special meeting was convened on 4th September, 2014 to analyze the incident.

OPTCL explained that at 23:08 hrs, 400kV Indravati(PG)-Indravati(OHPC) S/C line was tripped from Indravati(PG) end on over-voltage (Stg-1) protection, followed by 400kV Jeypur(PG)-Indravati(PG) S/C line from Jeypur end on earth fault. At 23.09 Hrs. ICT 1 & 2 of Indravati Power House tripped on over fluxing relay operation. Thereafter 220kV Jeypur(PG)-Jaynagar(OPTCL) D/C line tripped from OPTCL end. The load flow in each of above circuits to Jeypore PG was 200MW prior to disturbance. As 400kV link to Jeypore PG from Indaravati Power house had tripped earlier, heavy load demand in the area caused tripping of 220kV lines on over current.

The 220kV Therubali – Bhanjanagar ckt.1 & 2 tripped on DP relay operation at both end. The relay indication was Zone-1, 3 phase fault. The cause of above tripping may be attributed to heavy power swing due to high imbalance in load and generation in the loop. The 220kV Narendrapur - Mendhasal circuit tripped at Narendrapur on operation of directional over current. Due to heavy load throw on isolation of PGCIL system and Therubali– Bhanjanagr link, over voltage condition may have experienced.

The 220kV lines from Upper Kolab tripped on over voltage, and all the Generator of the power house tripped on over speed. All the Generator of Indravati power house tripped. The units 3,5 & 6 of Balimela Power house isolated from the Grid and #4,7 & 8 were tripped.

After detailed deliberation, PCC advised Powergrid, OPTCL and OHPC to clarify the following points:

1. Tripping of 400kV Indravati(PG) – Indravati(OHPC) on O/V Stg-I (112%, 5 sec delay) –

a) Reason for sudden rise of Indravati(PG) voltage by 25 kV (407 kV to 432kV) not understood. DR may be installed at the earliest at Indravati(PG) to analyse voltage, current, CB opening time etc. (Action : Powergrid)
b) Instances of O/V tripping also observed on 2nd and 3rd September, 2014. Therefore, Powergrid advised to check the electromagnetic O/V relay and CVT output for proper functioning. (Action : Powergrid)

2. Reason for operation of Instantaneous O/C & E/F relay at Jeypur(PG) end of 400kV Indravati(PG)-Jeypur(PG) line not clear, when there was actually no fault in the line (maximum line current in R-ph recorded by PMU was only 400A). Also reason for 50A rise in R-ph current and 200A fall in Y and B-ph currents of Indravati-Jeypur line, just before tripping. (Action : Powergrid)

3. After tripping from Jeypur(PG) end reasons for not sending DT signal to Indravati(PG) end. (Action : Powergrid)

4. When export through HVDC Gajuwaka was reduced from 500MW to 300MW, one ckt of Jeypur-Gajuwaka 400kV line shared 200MW while the other ckt shared 100MW. Earlier, each ckt was carrying 250 MW. Reasons may be explained. (Action : Powergrid)

5. Reason for tripping of both circuits of 220kV Theruvali-Bhanjanagar on DP, Zone-I, 3-ph from Bhanjanagar end, when there was actually no fault in the line (could be charged successfully shortly after tripping). OPTCL advised to send the related DR files of 220kV Theruvali S/s. (Action : OPTCL)

6. After tripping of 400kV Indravati(PG) – Indravati(OHPC) on O/V Stg-I, entire generation (600MW) of Indravati HPS got forced through 220kV Indravati-Theruvali 1 & 2, which did not trip, although their O/C protection is set to operate at 600A. (Action : OPTCL)

7. Tripping of 220kV Narenadrapur-Mendhasal on O/C from Narendrapur can be justified only if it occurs prior to loss of major part of S. Odisha generation (Indravati, Balimela and U. Kolab). (Action : OPTCL)

8. Voltage recorded by station DCS of U. Kolab HPS prior to tripping of its outgoing lines is required to justify tripping of these lines on overvoltage protection. U. Kolab-Jeynagar is only a 6km line whereas Jeynagar-Theruvali is a 123km line. Therefore, tripping of U. Kolab – Jeynagar line instead of Jeynagar-Theruvali appears to be unjustified. It may further be confirmed whether the lines tripped before or after tripping of the U. Kolab units. (Action : OHPC)

9. Reasons for tripping of 220kV Balimela-Jeynagar T/C, Balimela-U. Sileru S/C and station transformer-1 from Balimela HPS at 23:09:57 and reclosing of these CBs at 23:09:58 is also not understood. (Action : OHPC/OPTCL)

10. SOE has not been generated in SCADA system for tripping of 220kV Jeynagar-Jeypur-1, Theruvali-Bhanjanagar D/C from Bhanjanagar, Narendrapur-Mendhasal line from Narendrapur, overflux tripping of 400/220kV ICTs at Indravati HPS. These SOEs may therefore be immediately wired properly into their respective RTUs. (Action : OPTCL)

The issue was placed in 28th TCC meeting.

In 28th TCC, OPTCL, OHPC and Powergrid informed that detail analysis of this type of disturbances need some more time.

TCC advised OPTCL, OHPC and Powergrid to place the details in next PCC Meeting for further detail deliberation.

In 23rd PCC, during deliberation the reason behind sudden rise of voltage at 400kV Indravati (PG) S/s could not be ascertained.

After detailed deliberation, PCC felt a committee should be formed for detail analysis of this incidence. Accordingly, a committee of comprising of the following members was constituted:

1. Shri M. R. Mohanthy, Sr. GM, SLDC, OPTCL
2. Shri S. Nayak, AGM, NTPC
3. Shri S. Roy, SE (Testing) , WBSETCL, Kolkata
4. Shri J. Dutta, SE, CTC, DVC, Maithon
5. Shri S. Banerjee, CM, ERLDC,Kolkata
6. Shri A. Sen Sarma, DGM,CC, Powergrid
7. Shri B.Sarkhel, SE(PS),ERPC,Kolkata - Convenor

PCC advised OPTCL, OHPC & Powergrid to send reports on the disturbance from their respective ends along with DR, EL, relay flags and SLD to ERPC Secretariat. PCC also suggested to include recommendations in the report. Accordingly, the committee will study and decide the further course of action.

OPTCL, OHPC, NTPC & Powergrid agreed.

OPTCL, OHPC & Powergrid may explain.

Deliberation in the meeting

ERLDC informed that they have shared the available information with committee members. However, PCC felt that Powergrid and OHPC should send point wise details along with DR and EL flags.

Powergrid and OHPC agreed.

PCC advised to the Committee members to convene a meeting by end of October, 2014 and place the outcome in the next PCC.

2. **Disturbance at GMR system on 23/07/14**

In 22nd PCC, OPTCL informed that the relay setting at GMR end appeared to be very fast. Subsequent tripping of 400 kV Talcher- GMR line along with GMR units tripping while charging of 400 kV Meramundalli-Ib TPS line without removing of fault by OPTCL was serious concern. The tripping of 400 kV GMR-Talcher line also showed protection coordination needed at GMR with neighbouring 400 kV S/s.

PCC felt that the existing protection coordination of relays needs to be reviewed by OPTCL, Talcher and GMR to avoid indiscriminate tripping in future. OPTCL may submit a report in the next PCC meeting.

OPTCL agreed.

In 23rd PCC, OPTCL informed that a meeting with GMR has been scheduled on 29th September, 2014 to discuss the issue.

PCC advised OPTCL to send the outcome of the meeting to ERLDC/ERPC Secretariat.

OPTCL agreed.

OPTCL & GMR may update.

Deliberation in the meeting

OPTCL has submitted the report and informed that the time setting of zone 2 of distance protection and backup earth fault protection at GMR end were set low, which was causing incorrect relay coordination with adjacent line relays.

OPTCL informed that the revised time settings as follows:

- *Zone 2 time setting 300ms*
- *Backup earth fault protection 1.5 s*

3. **Disturbance in OPTCL and DVC system at 17:15 hrs on 12th July, 2014.**

As per report from OPTCL, due to staggered tripping of lines from TTPS end(initiated at 16:52Hrs) including both 220/132kV ICTs at TTPS, all the running units of TTPS(viz.Units#1,2,3,4 running on 132kV side) tripped ultimately at 17:04Hrs. Weather was reported to be of inclement condition at the time of trippings. The Units#5 & 6 connected to 220kV Bus at TTPS were out of bar prior to the incident. Consequent to the trippings, Joda remained connected to two sources only, viz. 220kV Joda-Ramchandrapur and 220kV Joda-Jindal-Jamshedpur. 220kV Joda-Ramchandrapur tripped at 17:15hrs on O/C which appears to be a relay mal-operation and needs to be investigated. Due to the above trippings, direction of power flow through 220kV Joda-Jindal-Jamshedpur reversed as Joda S/S became radial on DVC system resulting in heavy drawal from DVC system. Due to such heavy drawal by Joda, 132kV Barhi-Koderma D/c tripped on O/C

resulting in islanding of Bokaro-B TPS. The island formed being heavily deficit in generation vis-a-vis load, suffered low voltage and collapsed on Load generation imbalance. Thus 2x210MW units at Bokaro'B' tripped consequent to tripping of 132kV Barhi-Koderma D/C. The Following elements tripped:

i. 220kV Meramundali-TTPS-II (Tripped from Meramundali end)
ii. 220kV Meramundali-Bhanjanagar-I (Tripped from Meramundali end)
iii. 132kV TTPS-Duburi-I (Tripped from both ends)
iv. 160 MVA, 220/132kV ATR-II at TTPS
v. 160 MVA, 220/132kV ATR-I at TTPS
vi. 220kV Meramundali-TTPS-I (Tripped from Meramundali end)
vii. 60 MW TTPS Units-1, 2, 3 and 4
viii. 220kV Joda-Ramachandrapur (Tripped from Ramachandrapur end)
ix. 132kV Barhi-Koderma-D/C (Tripped from Koderma end)
x. 2*210 MW Unit-2 and 3 at BTPS

After detailed deliberation 22nd PCC felt that the incidence could not be analyzed unless the detailed tripping reports are received from all the substations involved. PCC took serious note of non- submission of detailed tripping report by NTPC,TTPS end and advised NTPC to place the details in 100th OCC meeting scheduled to be held on 22nd August, 2014 for detailed deliberations. OPTCL was also advised to inquire about any tripping report from 220 kV TTPS-NALCO-Rengali line or 220 kV TSTPS for further investigation. The tripping incident will be again discussed after compiling reports received from all concerned.

Subsequently, a special meeting was convened on 4th September, 2014 to analyze the incident.

TTPS (NTPC) explained that, at 16:50hrs there was a R phase to ground fault in 132kV Duburi-TTPS line-1 and the fault has been cleared from both ends. Simultaneously 132kV Duburi-TTPS line-2 tripped from Duburi end and autoreclosure of TTPS end was successfully operated load flow is zero. But at the same time ICT-2 at TTPS was tripped on Neutral Directional O/C and 220kV TTPS-Meramundali-2 was tripped from Meramundali end.

Thereafter, at 16:58hrs 220kV Meramundali-TTPS-1 was tripped from Meramundali end on O/C and ICT-1 at TTPS tripped because of OLTC diverter switch Explosion vent R-ph rapture.

Therefore, TTPS completely got isolated from the grid, at 17:01 hrs TTPS units 2, 3, 4 got tripped on over speed and unit 1 got tripped on Drum Level Hi protection.

After detailed deliberation, PCC advised TTPS (NTPC) and OPTCL to clarify the following points:

- Full relay indications from OPTCL/TTPS (NTPC) not yet obtained. Specifically tripping of 220kV TTPS-Meramundali-II and 220kV Meramundali-Bhanjanagar-I from one end only, needs to be explained.
- O/C operation of 220kV Ramchandrapur-Joda needs to be checked.
- Over-current settings of 132kV Barhi-Koderma D/c need to be checked.
- Tripping of 132kV Barhi-Biharshariff needs to be corroborated.
- Tripping of 220kv TTPS-TSTPP, TTPS-Rengali to be cross-checked for occurrence and relay indications.
- Relays at TTPS/Meramundali need to be checked/audited.
- W.r.t the fault at 17:01hrs, the fault persistence time of 560ms is a violation of CEA (Grid Standards) Regulations, 2010. As per Cl.3 e) regarding 'Standards for Operation and Maintenance of Transmission Lines', maximum fault clearance time for 220/132kV Transmission system is 160ms.

In 23rd PCC, NTPC has given the following clarification:

- Regarding tripping of 220kV TSTPP-TTPS line from TSTPP end, the circuit breaker was in closed condition but TTPS end breaker got opened without any relay indication.

- Protection relay of Auto Transformer 1 & 2 will be done on available opportunity.
- Line breaker of 220kV TTPS-Rengali line was tripped from Rengali end on O/C. TTPS end breaker was in closed condition.

OPTCL was advised to give their clarification in written communication.

OPTCL agreed.

OPTCL & NTPC may update.

Deliberation in the meeting

NTPC informed that, protection relay of Auto Transformer 1 has been tested and found satisfactory. & Protection relay of Auto Transformer 1 will be tested on available opportunity.

PCC advised OPTCL to give their clarifications in written communication. OPTCL agreed.

ITEM NO. C.4: Disturbance at FSTPP on 28th August 2014.

On 28th August, 2014 at around 11:13hrs, earth fault was suspected to have occurred in B-Ø of 400 kV FSTPP-Malda-II due to which all the running units of FSTPP along with all incoming/outgoing feeders tripped. Power supply to Bangladesh at HVDC Bheramara also got affected.

After detailed deliberation, PCC in its special meeting on 4th September, 2014 advised Powergrid and NTPC Farakka to give the action plan.

Accordingly, observations, NTPC & Powergrid have given the following action plan in 23rd PCC meeting:

1. Non-clearance of fault at FSTPP end for 400kV FSTPP-Malda-II. (Action : NTPC & Powergrid) --- T*ie CB -3252 (BHEL make) has been tested and found in order but it was suspected the CB operation was sluggish. The existing CB will be replaced.*
2. DR plots of 400kV FSTPP-Malda-II at FSTPP end (not GPS synchronized) (triggered at 11:06:28:291) depict that opening of 3-ph Tie breakers started at 11:06:28:332 and Main breakers at 11:06:28:333. However opening of the breakers are not confirmed in the DR channels and fault current through B-phase persists even after around 1000ms. It appears that FSTPP end breaker did not open. Powergrid may give a detailed report regarding testing carried out, problems detected and the rectification activities carried out for the main/tie breakers and the associated relays. (Action : Powergrid) --- *The relays LZ and REL relays will be replaced with new Micom and Siprotec relays.*
3. LBB for 400kV FSTPP-Malda-II connected to Bus-I did not operate. (Action : Powergrid)— *Current elements were not functional, the same are being replaced. Duplication of LBB scheme is also in progress.*
4. Non-opening of Behrampore end breakers due to which Directional E/F was triggered at Jeerat end. (Action : Powergrid)--- *Time coordination has been done.*
5. The tripping of 315MVA ICT-III at Malda on backup O/C and that of 132kV Malda(PG)-Malda from Malda(WB) end. (Action : Powergrid)----
6. Occurrence of Over-voltage Stage-I subsequently. (Action : Powergrid)

NTPC and Powergrid may update the status.

Deliberation in the meeting

NTPC & Powergrid updated the status as follows:

1. Non-clearance of fault at FSTPP end for 400kV FSTPP-Malda-II. (Action : NTPC & Powergrid) --- T*ie CB -3252 (BHEL make) has been tested and found in order but it was suspected the CB operation was sluggish. The existing CB will be replaced.*
2. DR plots of 400kV FSTPP-Malda-II at FSTPP end (not GPS synchronized) (triggered at 11:06:28:291) depict that opening of 3-ph Tie breakers started at 11:06:28:332 and Main breakers at 11:06:28:333. However opening of the breakers are not confirmed in the DR channels and fault current through B-phase persists even after around 1000ms. It appears that FSTPP end breaker did not open. Powergrid may give a detailed report regarding testing carried out, problems detected and the rectification activities carried out for the main/tie breakers and the associated relays. (Action : Powergrid) --- *The relays LZ and REL relays have been replaced with new Micom and Siprotec relays.*
3. LBB for 400kV FSTPP-Malda-II connected to Bus-I did not operate. (Action : Powergrid)— *Current elements were not functional the same have been replaced. Duplication of LBB scheme is also in progress.*
4. Non-opening of Behrampore end breakers due to which Directional E/F was triggered at Jeerat end. (Action : Powergrid)--- *Investigation is in progress.*

ITEM NO. C.5: Efficient Evacution of Power from 2x210 MW Tenughat TPS, Lalpania—TVNL

Arrangement for evacuation of power from Tenughat TPC is through the following two transmission lines:

1) Tenughat TPS to Bihar Sharif(BSEB) S/S through 400 KV Single Circuit line.
2) Tenughat TPS to Patraru TPS through 400 KV Single Circuit line.

Both lines are operating at 220 kV due to non readiness of 400 K V S/S at terminating ends.

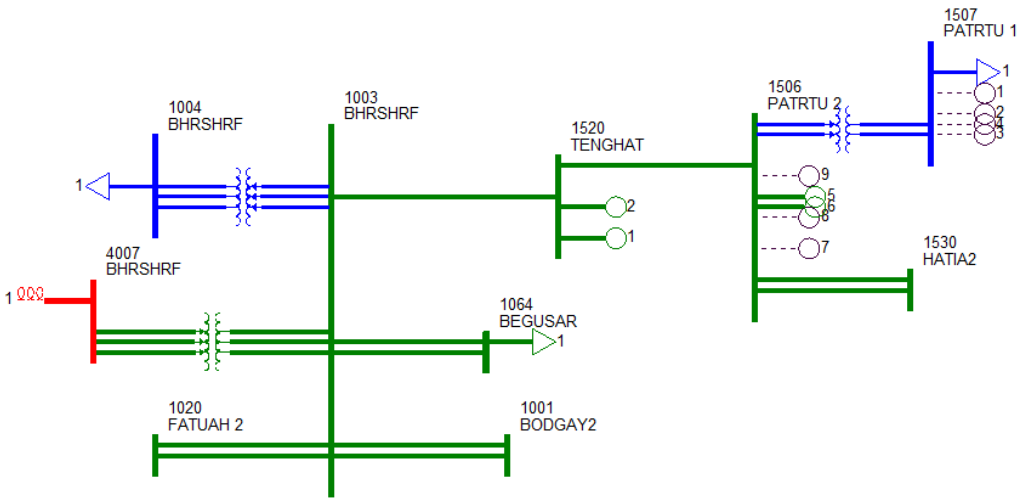

TVNL Evacuation System

In 27th TCC, TVNL informed that, at TVNL end the up gradation to 400 kV level is in process. Accordingly, TCC also advised JSEB to deposit the requisite amount to Powergrid for up gradation/termination work entrusted to Powergrid for operation of the line at rated voltage. This will facilitate Tenughat-Biharshariff line to be operated at 400 kV and stability of the TVNL units.

In 21st PCC, TVNL informed that 2x250 MVA ICT is already available at TVNL and the erection

work is in progress. TVNL reported that work will be completed by December, 2014 at TVNL end.

Powergrid informed that, up gradation related works at 400 kV Biharshariff S/s has now stalled due to some payment issues with JSEB. However, it is expected to complete the work by December, 2014, if in the mean time payment issues get settled at earliest.

In 28th TCC Powergrid informed that payment of around 4.58 cr. is pending from JSEB and the completion of the work would take 3 months from date of payment.

JSEB informed that the payment has been delayed due to some fund constraints and it would be released shortly in 2-3 instalments starting from November, 2014.

During deliberation ERLDC expressed that conversion of 220kV Tenughat-Biharshariff line to 400kV level may not bring the total stability of Tenughat Power Station. Status of construction for 400kV Tenughat-New Ranchi D/C line and 220kV Tenughat-Govindpur-Dumka line under Powergrid consultancy were enquired. It was informed that 400kV line is under scope of Powergrid under deposit work of Jharkhand strengthening scheme for which around 450 Cr. Jharkhand has to deposit. Representative from Jharkhand informed that 220kV line is not under scope of Powergrid consultancy. TCC however advised Jharkhand and CTU to deliberate on this in lower forum of ERPC.

In 23rd PCC, it was informed that JUVNL agreed to start installment payments to Powergrid from November, 2014 onwards.

TVNL, JSEB, Powergird may update.

Deliberation in the meeting

JUVNL start the installment payments to Powergrid from November, 2014 onwards.

ITEM NO. C.6: Disturbance at 220 kV Patratu (JSEB) S/S at 13:10 hrs on 21/07/14.

At 13:09hrs, due to bursting of R-Ø LA of 150MVA Auto transformer-1 burst in switchyard of Patratu S/s, the following lines tripped:

i. 220kV Patratu-Tenughat (tripped at Patratu end)
ii. 220kV Ranchi-Hatia (New) (tripped at Ranchi end)
iii. 132kV Hatia-Patratu-D/C(tripped at Patratu end)
iv. 132kV Hatia-Chandil(tripped at Chandil end)
v. 132kV Hatia- Sikidari(tripped at Hatia end)

Analysis:
It was telephonically reported that the sequence of events were initiated due to bursting of R-Ø HV side LA of 150MVA Auto transformer-1 in switchyard of Patratu S/s. However, the report received from JSEB does not corroborate the same. It appears that the there was a delay in clearance of the said fault from Patratu end. As a result, 132kV Hatia-Patratu-D/C tripped from Patratu end on O/C & E/F protection. As per the report, 220kV PTPS-Hatia D/c did not trip from either ends. Due to nonopening of breakers of 220kV Patratu-Hatia-D/C from both the ends, all other lines from Hatia and Hatia (new) tripped. 220kV Ranchi-Hatia (new) tripped from Ranchi end only and cleared the fault.

Discrepancies observed and Remedial Measures/Suggestions:

- Delay in fault clearance at Patratu end needs to be investigated. Non-opening of breakers of 220kV PTPS-Hatia at either ends also needs to be checked.
- Protection system at Patratu, Hatia, and Tenughat needs to be audited/tested thoroughly.

In 22nd PCC, JUSNL representative informed that the tripping details at Patratu end are available

with newly constituted Jharkhand Urja Utpadan Nigam Ltd (JUUNL). Further, he informed that testing of protective relays by M/s Areva is in progress at all Substations in around 220 kV Chandil S/s. The relay settings wherever it is necessary would be changed.

PCC advised JUSNL to submit the detailed report after collection of tripping information from Patratu TPS and Hatia S/s at the earliest.

In 23rd PCC, SLDC, Jharkhand informed that they have already communicated the issue to JUSNL but reply was not yet received from them.

PCC advised to give a copy of correspondence to ERPC Secretariat for further necessary action.

JSEB may update.

Deliberation in the meeting

SLDC, Jharkhand informed that they have not received any reply from JUUNL.

ITEM NO. C.7: Tripping of 400 kV Farakka-Berhampore line.

It has been observed quite sometimes that 400 kV Farakka- Berhampore line experienced repeated tripping from Berhampore end only and remained charged from FSTPP end. These incidences are cause of concern for safe grid operation. The tripping report from Powergrid has not yet been received by ERLDC in this regard for which no conclusion could be arrived at.

In reply, Powergrid informed that the fault was in one circuit of 400kV Berhampore-Bheramara D/C and the same was leading to maloperation at Berhampore end of 400kV FSTPP-Berhampore line. Powergrid indicated that prima facie the SOTF relay at Berhampore end appeared to be mal-operating and such mal-operations would be investigated and rectified shortly.

In 22nd PCC, Powergrid reported that SOTF relay at Berhampore end has been rectified.

PCC advised Powergrid to submit a report in this regard. Powergrid agreed.

In 23rd PCC, Powergrid agreed to submit the report on 25th September, 2014.

Till date no report has been received from Powergrid.

Powergrid may expediate.

Deliberation in the meeting

Powergrid has submitted the report.

ITEM NO. C.8: Members may update the following:

1. In 23rd PCC, WBSETCL informed that 220 kV two main bus system will be made operational at Bidhannagar S/s by Feb, 2015.

WBSETCL may update the present status.

Deliberation in the meeting

WBSETCL informed that the scheme would be implemented in schedule.

2. In 19th PCC after deliberation on **Trippings of 220 kV lines from Hatia S/s on 24.03.14 & Disturbance in Adityapur area of JSEB on 17/03/14,** JSEB was advised to thoroughly check the relay settings and coordination of relays at 132kV and 220kV S/s for satisfactory performance and report the findings to ERPC Secretariat within 15 days.

In 22nd PCC, JSEB informed that replacement of electromechanical relays of 33 kV lines is in progress and it will be completed by August, 2014.

In 23rd PCC, JUSNL stated that the replacement of relays is nearly completed, which is under the scope of JBVNL and status will be submitted in the next meeting.

JUSNL may update.

Deliberation in the meeting

JSEB informed that replacement of electromechanical relays of 33 kV lines is in progress and it will be completed by November, 2014.

3. In 23rd PCC, JSEB informed that the relays at 220kV Chandil S/s have been tested and agreed to give the report to ERPC Secretariat.

JSEB may update the status.

Deliberation in the meeting

PCC advised JSEB to submit the relay testing report within a week. JSEB agreed.

4. In 23rd PCC, OPTCL informed that

- They are replacing the old O/C EM relays with numerical relays at 220kV Meramundali S/s.
- Some relays at 220 kV Theruvali S/s were already replaced and rest will also be replaced by December, 2014.
- The new 220 kV bus bar protection at Meramundali, Theruvali and Budhipadar S/s will be put in service by December, 2014.

OPTCL may please update.

Deliberation in the meeting

OPTCL informed that the work would be completed in schedule.

ITEM NO. C.9: PROTECTION PHILOSOPHY OF EASTERN REGION

In the Special meetings on "Protection Co-ordination of JSEB System and its neighbouring utilities" held on 12.11.13, 05.12.13 & 28.01.14 the protection philosophy for Eastern Region was agreed as given below:

Sl. No.	Zone	Direction	Protected Line Reach Settings	Time Settings
1	Zone-1	Forward	80%	Instantaneous
2	Zone-2	Forward	120%	300 milliseconds
	Zone-2 (for 220kV and below)	Forward	120 % of the protected line or 100% of the protected line + 50% of the adjacent shortest line (whichever is less)	300 milliseconds
3	Zone-3	Forward	100 % of the protected line + Za	1.0 Sec
4	Zone-4	Reverse	20%	1.2 Sec

Where, Za = Impedance of 100% of the adjacent longest line or 90 % of the Transformer impedance (whichever is less).

In 19th PCC, all the constituents were requested to adopt the same philosophy for their inter as well as intra state lines for better protection co-ordination of their systems and Eastern Regional system as a whole. Implementation of this philosophy may also be extended for BSPTCL, DVC and West Bengal systems.

A special meeting was convened to review the zone settings of BSPTCL, DVC and West Bengal systems on 06.08.14. The zone settings as updated by the constituents (till date) are circulated in the meeting**.** Concerned members are requested to confirm the given settings and also update the bold and blank fields.

The updated zone settings of the various lines are available at ERPC website.

23rd PCC advised all constituents to update the settings at their end by 7th October, 2014. Thereafter, a separate meeting will be convened to discuss the implementation of zone settings recommended by the Special Task Force.

Members may update.

Deliberation in the meeting

JSEB informed that line length of 132kV Maithon-Jamtara line is 34km and requested DVC to change the zone settings accordingly to avoid overreaching of the relay at Maithon.

DVC requested JSEB to provide the tripping details. JSEB agreed.

PCC advised all constituents to update the settings available at ERPC website.

The house was informed that, a separate meeting will be convened in the month of November, 14 to discuss the implementation of zone settings recommended by the Special Task Force.

ITEM NO. C.10: Availability of single phase auto-reclosure facility for 220KV and above lines

Single phase Auto-reclosure scheme helps to ensure Grid security by preventing unwarranted tripping of lines on short duration transient faults. However, operation of Auto-reclosure has not been in order in several cases.

In 21st PCC, PCC reiterated that as per CEA(Technical Standards for construction of Electric Plants and Electric Lines) Regulations 2010, single reclose auto-reclosure facility is to be kept in service for all lines 220kV and above.

Accordingly, PCC advised all constituents to forward the list of transmission lines for which single-phase auto-reclosure is not in service, stating the reason for the same to ERLDC with a copy to ERPC Secretariat.

PCC also advised to inform the failure of successful auto-reclosure operation to ERLDC stating the detailed relay indications along with DR/EL outputs.

23rd PCC advised all the constituents to send the requisite information to ERLDC before 7th October, 2014.

Constituents agreed.

ERLDC may update the status.

Deliberation in the meeting

PCC advised all the constituents to send the requisite information to ERLDC.

ITEM NO. C.11: PLCC problem in 400 kV Sagardighi-Parulia line II

WBPDCL reported that PLCC link repeatedly receiving carrier protection signal at Sagardighi end from 400 kV Parulia S/s without any fault in the line on following occasions:

Sl. No.	Date	Time	Relay Operated
1	09/06/14	16:16	Carrier protection,
2	11/06/14	16:25	Carrier protection
3	20/06/14	15:52	Carrier protection
4	16/06/14	16:32	Carrier protection
5	01/05/14	15:55	Carrier protection
6	07/05/14	16:19	Carrier protection
7	25/03/14	23:03	Carrier protection

In 23rd PCC, Powergrid informed that PLCC panel is of BPL make at Sagardighi end and the BPL engineer has been called for rectification, if any.

Powergrid may update the status.

Deliberation in the meeting

Powergrid informed that the PLCC panels have been rectified.

ITEM NO. C.12: ANY OTHER ITEM.

Meeting ended with vote of thanks to the chair

****

Annexure - A

Participants in 24th PCC Meeting

Venue: ERPC Conference Room Time: 11:00 hrs Date: 20.10.14 (Monday)

Sl No	Name	Designation	Organization	Contact Number	Email	Signature
1	A.K. Bandyopadhyay	MS	ERPC	9433068533	mserpc-power@nic.in	
2	U.K. Verma	GM	ERLDC	08902496220	ujjwalkumar.verma@gmail.com	
3	[illegible]	[illegible]	[illegible]	9433041802	dksrivastava55@yahoo.co.in	
4	P.S. Das	CM	ERLDC	9433041837	psdas_psd@yahoo.co.in	
5	S. Banerjee	CM	ERLDC	9433091827	suvojitb@gmail.com	
6	Jiten Das	CM	POWERGRID, ER-1	9431815768	[illegible]andmark@gmail.com	
7	J. DUTTA	SE	DVC	9431515713	jayanta.dvc@dvc.gov.in	
8	R.P. Singh	DGM (OS)	NTPC	9431013366	rpsingh01@ntpc.co.in	
9	Vivek Pushpakar	Dy Mang	NTPC Barh	9473199217	Vivek.pushpakar@ntpc.co.in	
10	R.V. Patnaik	AGM	NTPC, BBSR	9438233243	rvpatnaik@ntpc.co.in	
11	Ajay Kumar	DM (E)	NHPC, Ranjit	9800869065	ajaynhpc78@gmail.com	Ajay
12	J. Pand	EMT (E)	NHPC, Teesta	9800003393	jaganathnhpc@gmail.com	
13	S.A. Ansari	Sr. Engr.	PGCIL	9434713589	shabbir.bilal@gmail.com	
14	R.P. Kundu	Engr.	ERLDC	9903329591	rajpratim@gmail.com	Raj
15	Saurav K Sahay	Sr Engineer	ERLDC	9432013173	Sahay.Saurav@gmail.com	Sahay
16	B.B. Bhoi	Dy. Mgr	ERLDC	9432295150	bibhu.ed@gmail.com	
17	M.K. Thakur	Dy. Manager	ERLDC	9432351832		
18	N. Mandal	AGM (E)	GATI	8016082299	niladri.mandal@gatiinfra.com	
19	H.P. Mahapatra	Mgr (El)	OHPC	9861164943	hpm.ohpc@gmail.com	
20	L. Nayak	GM (El)	OPTCL	9438907801	ele.lanayak@optcl.co.in	

"Coming together is a beginning, staying together is progress, and working together is success." –Henry Ford

Participants in 24th PCC Meeting

Venue: ERPC Conference Room | Time: 11:00 hrs | Date: 20.10.14 (Monday)

Sl No	Name	Designation	Organization	Contact Number	Email	Signature
21	M. R. Mohanty	Sr. GM(Ops)	SLDC, OPTCL	09438907310	[illegible] @ gmail.com	
22	S. Roy	A.C.E	WBSETCL	9434910543	[illegible]_60 @ yahoo.com	
23	RAJDEEP BHATTACHARJEE	R.E.	BSPHCL	9830380689	rekollosphcl@gmail.com	
24	Rambaboo Singh	EEE	BSPTCL	7763817723	eeecritl@gmail.com	
25	Vidya Sagar Singh	ESE	JUSNL	9934169984	sagarjseb@gmail.com	
26	P.K. DE	EE	ERPC	9433125846	pkderpc@gmail.com	
27	G. Roy	AEE	ERPC		eeob-cccr@yahoo.com	
28	D. K. Bauri	EE	ERPC	9883617736	eccp-erpc@gov.in	
29	SP Sinha	Senior Mgr	MPL	7781017814	sinhasp@tatapower.com	
30	Akash Bajpai	LE	MPL	9204757804	akash.bajpai@tatapower.co	
31	P.K. Kundu	SE(E)	SLDC, HOW WBSETCL	9433088429	pkundu_1961@yahoo.co.in	
32	D. K. Das	DGM, SLDC, OPTCL	SLDC, OPTCL	9438904405	pradipkumar.das@yahoo.co.in	
33	S. K. Harichandan	DGM, Meram	OPTCL	9438907042	swaraupharichandan@yahoo.co.in	
34	S.K. KUNDU	SDE, CLD	DVC	9470333756	kundu_santosh@yahoo.com	
35	SOYDEB BANDYOPADHYAY	SE(C)	ERPC			
36						
37						
38						
39						
40						

"Coming together is a beginning, staying together is progress, and working together is success." –Henry Ford

Annexure-C2

Target date of completion for Purnea visit observations:

S.No.	Recommendations:	Time Frame
i	CT Secondary cables of all the 132KV Bays are to be replaced by 2.5 sq mm 4 core Multi-stranded Armoured cables with proper terminations at CT Base Terminal Box, CTJB and Panel end.	6 months
ii	The CTJB of all the 132KV Bays are to be replaced by proper CTJB having approved specifications. The terminal Blocks of the CTJB should be stud type which comes along with the CTJB. The Cables should be brought inside the CTJB with proper GLANDS and dressing. The CTJB should be EARHTED through 4mm Flat Earthing strips duly connected to the earthing mesh in the switchyard . The same is also applicable for 132KV Bus PTJB	2 months (work under progress)
iii	Earth Resistance of all the structures of the 132KV Switchyard (i.e. CT Structure, Breaker Structure, Isolator Structure, Gantry, Bus Support Structures, PT structures, etc.) should be measured and it should be brought down within 1(one) ohms wherever applicable.	completed (earth resistance between 0.8 to 1 ohm)
iv	TAN DELTA Measurements of all the 132KV CT's are to be carried out. The TAN DELTA value should be within **2%** (C.P.R.I recommended limit for 132 kV C.T, whereas some utilities prefers 1% also) and if any value exceeds this, or an increasing pattern is observed on subsequent measurements, and if any value exceeds this, then the particular CT has to be replaced by a healthy CT.	2 months
v	132KV CT Specifications are to be standardised for 132KV Lines and transformers for the whole BSPTCL system in order to reduce human error during Installation and Commissioning. This type of varied CT's having different Core Classifications is not advisable to be used in the Protection System. This will in turn reduce the margin of error during commissioning process as well as reduce the INVENTORY for Spares.	2 months
vi	Presently the CT Ratio of all the 132KV CT's are to be checked for its ratio and Polarity. Thereafter, the Protection and the Metering Cores are to be identified which will be used for Distance, Backup and Metering Purpose for all the Three Phases. Accordingly, the Connections in the CTJB and thereafter the terminations to the Panel end are to be completed. For a Guideline, the PS class Cores having a saturation of around 1400Volts may be used for Distance Protection, another PS class core or 5P cores can be used for Back-Up Directional Protection (using one PS core for one Phase and 5P core for the other 2 phases having different magnetising characteristics should always be discouraged for High impedance type protections mainly for transformer/ feeders), and the 0.2 or 1.0 Class core should be used for metering.	2 months
vii	Retrofitting of Protection Relays were carried out in different 132KV Lines. There are no approved drawings available for the retrofitted panels and the Installation of some of the New Relay with the individual panel wiring along with the terminations were not done in a proper fashion. From the quality of dressing and terminations, it clearly signifies that there was absolutely no supervision by any BSPTCL authority when the VENDOR was carrying out the work of installation and commissioning. The dressings of the wires along with the terminations are to be completed for all the panels where New Relays have been installed.	conveyed to Aee/Eee/Ese we will maintain the drngs in future
viii	The committee also felt that the drawing and documentation was very poor on the Substation Side as well as the MRT side of BSPTCL. Not a single Control and Protection Drawing for 132KV bays were available at the S/Stn end by which a person can work and rectify faults in different circuits.	suggestions conveyed to Aee/Eee/Ese
ix	The work specified in item 3 and 4 under ANALYSIS part are to be completed immediately. Till completion, the existing setting at 132 kV Purnea (PGCIL) end should continue.	work completed